TM 9-2330-376-14&P

TECHNICAL MANUAL

OPERATOR'S, ORGANIZATIONAL, DIRECT SUPPORT AND GENERAL SUPPORT MAINTENANCE MANUAL (INCLUDING REPAIR PARTS AND SPECIAL TOOLS LISTS)

FOR

CHASSIS, TRAILER: 5-TON, 4-WHEEL, GEMSS XM979 (NSN 2330-01-170-6747)

TRAILER, FLATBED: 5-TON, 4-WHEEL XM1061 (NSN 2330-01-207-3532) M1061A1 (NSN 2330-01-207-3533)

TRAILER, GENERAL PURPOSE, FLATBED: 7-1/2-TON XM1073 (NSN 2330-01-287-9111)

Operating Instructions	2-1
Operator/Crew PMCS	2-3
Lubrication Instructions	3-1
Operator/Crew Troubleshooting Procedures	3-7
Organizational PMCS	4-3
Organizational Troubleshooting Procedures	4-8
Maintenance Allocation Chart (MAC)	B-1
Repair Parts and Special Tools Lists (RPSTL)	F-1

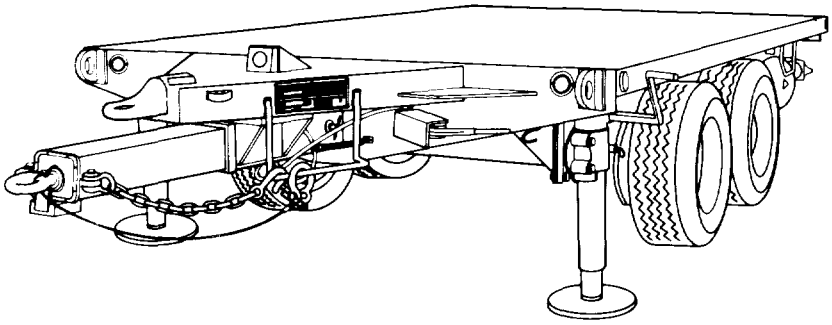

This manual supersedes TM 9-2330-376-14&P , dated 30 June 1988, including all changes.

Approved for public release: distribution is unlimited.

HEADQUARTERS, DEPARTMENT OF THE ARMY MARCH 1992

CHANGE

No. 2

HEADQUARTERS
DEPARTMENT OF THE ARMY
Washington D.C., 4 April 1994

**OPERATOR'S, ORGANIZATIONAL, DIRECT SUPPORT,
AND GENERAL SUPPORT MAINTENANCE MANUAL
(INCLUDING REPAIR PARTS AND SPECIAL TOOLS LISTS)**

**FOR
CHASSIS, TRAILER; 5-TON, 4-WHEEL, GEMSS
XM979 (NSN 2330-01-170-6747)**

**TRAILER, FLATBED: 5-TON, 4-WHEEL
XM1061 (NSN 2330-01-207-3532)
XM1061A1 (NSN 2330-01-207-3533)**

**TRAILER, GENERAL PURPOSE FLATBED: 7-1/2-TON
XM1073 (NSN 2330-01-287-9111)**

Current as of 11 Jan 94

TM 9-2330-376-14&P, dated 31 March, 1992, is changed as follows:

1. Remove old pages and insert new pages as indicated below.

2. File this change sheet in front of the publication for reference purposes.

Remove Pages	Insert Pages
F-7 thru Figure 4	F-7 thru Figure 4
5-1 thru 6-2'	5-1 thru 6-2
8-1 thru Figure 10	8-1 thru Figure 10
11-1 and 11-2	11-1 and 11-2
12-1 thru 13-2	12-1 thru 13-2
14-1 and 14-2	14-1 and 14-2
15-1 thru 28-2	15-1 thru 28-2
32-1 thru BULK-1/(blank)	32-1 thru BULK-1/(blank)
I-1 thru 1-29	I-1 thru I-30

Approved for public release: distribution is unlimited.

By Order of the Secretary of the Army:

GORDON R. SULLIVAN
General, United States Army
Chief of Staff

Official:

MILTON H. HAMILTON
Administrative Assistant to the
Secretary of the Army
06618

Distribution:
To be distributed IAW DA Form 12-39-E (Block No. 0004) maintenance requirements for TM 9-2330-376-14&P.

CHANGE 1

No.1

HEADQUARTERS
DEPARTMENT OF THE ARMY
Washington D. C., 18 *December 1992*

OPERATOR'S, ORGANIZATIONAL, DIRECT SUPPORT, AND GENERAL SUPPORT MAINTENANCE MANUAL (INCLUDING REPAIR PARTS AND SPECIAL TOOLS LISTS)

FOR

CHASSIS, TRAILER; 5-TON, 4-WHEEL, GEMSS XM979 (NSN 2330-01-170-6747)

TRAILER, FLATBED: 5-TON, 4-WHEEL XM1061 (NSN 2330-01-207-3532) M1061A1 (NSN 2330-01-207-3533)

TRAILER, GENERAL PURPOSE FLATBED: 7-1/2-TON XM1073 (NSN 2330-01-287-9111)

TM9-2330-376-14&P, dated 31 March, 1992, is change as follows:

1. Remove old pages and insert new pages as indicated below.

2. New or changed information is indicated by a vertical bar in the margin of the page,

Remove Pages	Insert Pages
4-5 and 4-6	4-5 and 4-6
4-13 and 4-14	4-13 and 4-14
4-79 and 4-80	4-79 and 4-80

3. File this change sheet in front of the publication for reference purposes.

By Order of the Secretary of the Army:

GORDON R. SULLIVAN
General, United States Army
Chief of Staff

Official:

MILTON H. HAMILTON
Administrative Assistant to the Secretary of the Army
03408

DISTRIBUTION:
To be distributed IAW DA FORM 12-39-E (Block 0004) maintenance requirements for TM9-2330-376-14&P

Approved for public release; distribution is unlimited.

FOR INFORMATION ON FIRST AID, REFER TO FM 21-11.

WARNING

ASBESTOS HAZARD

DO NOT handle brakeshoes, brakedrums, or other brake components unless area has been properly cleaned. There may be asbestos dust on these components which can be dangerous if you touch it or breathe it. Wear an approved filter mask and gloves. Never use compressed air or a dry brush to clean brake components. Dust may be removed using an industrial-type vacuum cleaner. Clean dust or mud away from brake components with water and a wet, soft brush or cloth. Failure to follow this warning may result in serious illness or death to personnel.

WARNING

BRAKE SYSTEM

Do not allow grease to contact brakeshoe linings. Wipe excess lubricant from the area of brakeshoe linings to avoid grease soaking the linings. Brakeshoe linings can absorb grease and oil, causing early glazing of linings and very poor braking action. If brakeshoe linings become soaked, have Organizational Maintenance replace them. Failure to follow this warning may cause brakes to malfunction, resulting in serious injury or death to personnel.

WARNING

COUPLING AND UNCOUPLING TRAILER

- All personnel must stand clear of towing vehicle and trailer when coupling and uncoupling trailer. Failure to follow this warning may result in serious injury or death to personnel or damage to equipment.
- If trailer is not coupled to towing vehicle, ensure that wheels are securely chocked. Failure to do so may cause trailer to roll, resulting in serious injury or death to personnel or damage to equipment.

WARNING

DRY CLEANING SOLVENT

Dry cleaning solvent, P-D-680, is toxic and flammable. Always wear protective goggles and gloves, and use only in a well-ventilated area. Avoid contact with skin, eyes, and clothes, and DO NOT breathe vapors. DO NOT use near open flame or excessive heat. The solvent's flash point is 100 °F-138°F (38 °C-59°C). If you become dizzy while using cleaning solvent, immediately get fresh air and medical help. If solvent contacts eyes, immediately wash your eyes and get medical aid.

WARNING

ELECTRICAL SYSTEM

Ensure that intervehicular cable assembly is disconnected from towing vehicle before performing maintenance on electrical system. Failure to do so may result in electric shock or burns.

WARNING

EYE PROTECTION

Wear eye protection when driving heads off drive screws when replacing data plates. Failure to follow this warning may result in eye injury or loss of vision.

WARNING

HEAVY COMPONENTS

- Never crawl under equipment when peforming maintenance unless equipment is securely blocked. Keep clear of equipment when it is being raised or lowered. Do not allow heavy components to swing while suspended from lifting device. Exercise extreme caution when working near a cable or chain under tension. Failure to follow this warning may result in severe injury or death to personnel.
- Do not stand under trailer while slinging operations are underway. Failure to follow this warning may cause serious injury or death to personnel.
- Reach tube, spring assembly, and axle are heavy and awkward to handle. Use caution, provide adequate support, and use assistance when removing and installing. Failure to follow this warning may result in burns.
- Ensure that spring assembly is supported before removing axle. Spring assembly will fall without support. Failure to follow this warning may result in serious injury or death to personnel.
- Use assistance when lifting tire and wheel. Failure to follow this warning may result in serious injury to personnel.

WARNING

HOT COMPONENTS

When checking for improperly adjusted brakes or dry wheel bearings, cautiously feel each wheel hub and brakedrum. Serious burns can result from touching an overheated brakedrum.

WARNING

SPRING PRESSURE

- Spring inside inertia brake actuator is under pressure. Use care when disassembling inertia brake actuator. Failure to follow this warning may result in serious injury.
- Use caution when repairing airbrake chamber. Spring inside airbrake chamber is under tension. Failure to follow this warning may cause components to fly apart, resulting in injury to personnel.

TECHNICAL MANUAL

TM 9-2330-376-14&P

HEADQUARTERS
DEPARTMENT OF THE ARMY
Washington D. C., 31 *March 1992*

OPERATOR'S, ORGANIZATIONAL, DIRECT SUPPORT, AND GENERAL SUPPORT MAINTENANCE MANUAL (INCLUDING REPAIR PARTS AND SPECIAL TOOLS LISTS)

FOR

CHASSIS, TRAILER: 5-TON, 4-WHEEL, GEMSS
XM979 (NSN 2330-01-170-6747)

TRAILER, FLATBED: 5-TON, 4-WHEEL
XM1061 (NSN 2330-01-207-3532)
M1061A1 (NSN 2330-01-207-3533)

TRAILER, GENERAL PURPOSE, FLATBED: 7-1/2-TON
XM1073 (NSN 2330-01-287-9111)

Current as of 27 September 1991

REPORTING ERRORS AND RECOMMENDING IMPROVEMENTS

You can help improve this manual. If you find any mistakes or if you know of a way to improve the procedures, please let us know, Mail your letter, DA Form 2028 (Recommended Changes to Publications *and Blank Forms),* or DA Form 2028-2, located in the back of this manual, direct to: Commander, U.S. Army Tank-Automotive Command, ATTN: AMSTA-MB, Warren, MI 48397-5000. A reply will be furnished to you.

TABLE OF CONTENTS

Page

CHAPTER 1 INTRODUCTION

Section I. General Information 1-1
Section II. Equipment Description and Data..... 1-2
Section III. Technical Principles of Operation 1-12

CHAPTER 2 OPERATING INSTRUCTIONS

Section I. Description and Use of Operator's Controls and Indicators 2-1
Section II. Operator/Crew Preventive Maintenance Checks and Services (PMCS) 2-3

* **This manual supersedes TM 9-2330-376-14&P. dated 30 June 1988, including all changes.**

Approved for public release distribution is unlimited.

TABLE OF CONTENTS (Con't)

		Page
Section III.	Operation Under Usual Conditions	2-9
Section IV.	Operation Under Unusual Conditions	2-19
CHAPTER 3	**OPERATOR MAINTENANCE**	
Section I.	Lubrication instructions]	3-1
Section II.	Operator/CrewTroubleshootingProcedures	3-7
Section III.	Operator Maintenance Procedures	3-12
CHAPTER 4	**ORGANIZATIONAL MAINTENANCE**	
Section I.	Repair Parts; Special Tools; Test, Measurement, and Diagnostic Equipment (TMDE); and Support Equipment	4-1
Section II.	Service Upon Receipt	4-2
Section III.	Organizational Preventive Maintenance Checks and Services (PMCS)	4-3
Section IV.	Organizational Troubleshooting Procedures	4-8
Section V.	General Maintenance Instructions	4-15
Section VI	Electrical System Maintenance..	4-18
Section VII.	Brake System Maintenance	4-29
Section VIII.	Wheels, Hubs, and Brakedrums Maintenance	4-79
Section IX.	Frame and Towing Attachments Maintenance	4-85
Section X.	Spring Assembly Maintenance	4-96
Section XI.	Body Maintenance	4-98
Section XII.	Accessory Items Maintenance	4-99
Section XIII.	Nonelectrical Gages Maintenance	4-105
Section XIV.	Painting and identification Marking.	4-108
Section XV.	Preparation for Storage or Shipment	4-110
CHAPTER 5	**DIRECT SUPPORT AND GENERAL SUPPORT MAINTENANCE**	
Section I.	Axle Maintenance	5-1
Section II.	Tire Maintenance	5-11
Section III.	Frame and Towing Attachments Maintenance	5-12
Section IV.	Spring Assembly Maintenance	5-13
APPENDIX A	REFERENCES	A-1
APPENDIX B	MAINTENANCE ALLOCATION CHART	B-1
APPENDIX C	COMPONENTS OF END ITEM AND BASIC ISSUE ITEMS LISTS	C-1
APPENDIX D	ADDITIONAL AUTHORIZATION LIST	D-1

TABLE OF CONTENTS (Con't)

	Illus/ Fig	Page
APPENDIX E EXPENDABLE/DURABLE SUPPLIES AND MATERIALS LIST		E-1
APPENDIX F REPAIR PARTS AND SPECIAL TOOLS LISTS (RPSTL)		F-1
Section I. Introduction		
Section II. Repair Parts List		
GROUP 06 ELECTRICAL SYSTEM		
0609-LIGHTS		1-1
COMPOSITE LIGHT ASSEMBLY	1	1-1
0613 -HULL OR CHASSIS WIRING HARNESS		2-1
INTERVEHICULAR CABLE ASSEMBLY	2	2-1
WIRING HARNESS	3	3-1
GROUP 11 REAR AXLE		
1100- REAR AXLE ASSEMBLY		4-1
FRONT AND REAR AXLES	4	4-1
TRUNNION AXLE	5	5-1
GROUP 12 BRAKES		
1201- HANDBRAKES		6-1
HANDBRAKE INSTALLATION	6	6-1
1202- SERVICE BRAKES		7-1
SERVICE BRAKE ASSEMBLY	7	7-1
BRAKE BACKING PLATE ASSEMBLY	6	6-1
BRAKESHOE ASSEMBLY	9	9-1
1204- HYDRAULIC BRAKE SYSTEM		10-1
SERVICE BRAKE HYDRAULIC COMPONENTS	10	10-1
HYDRAULIC LINES, TUBES, AND FITTINGS (XM979 AND XM1061)	11	11-1
HYDRAULIC LINES, TUBES, AND FITTINGS (M1061A1)	12	12-1
HYDRAULIC LINES, TUBES, AND FITTINGS (XM1073)	13	13-1
BRAKE ACTUATOR ASSEMBLY (XM979 AND XM1061)	14	14-1
BRAKE ACTUATOR ASSEMBLY (XM979 AND XM1061)	15	15-1
MASTER CYLINDER ASSEMBLY	16	16-1
1208- AIRBRAKE SYSTEM		17-1
AIRLINES, HOSES, AND FITTINGS (XM979, XM1061, AND M1061A1)	17	17-1
AIR LINES, HOSES, AND FITTINGS (XM1073)	18	18-1
AIR FILTER ASSEMBLY	19	19-1
AIR RESERVOIR AND RELAY VALVE	20	20-1
AIRBRAKE CHAMBER ASSEMBLY	21	21-1
GROUP 13 WHEELS AND TRACKS		
1311- WHEEL ASSEMBLY		22-1
DISC AND RIM, HUB, AND BRAKEDRUM	22	22-1
1313- TIRES, TUBES, TIRE CHAINS		23-1
TIRE AND VALVE	23	23-1
GROUP 15 FRAME, TOWING ATTACHMENTS, DRAWBARS, AND ARTICULATION SYSTEMS		
1501 -FRAME ASSEMBLY		24-1
FRAME COMPONENTS	24	24-1

TABLE OF CONTENTS (Con't)

	Illus/ Fig	Page
1503 -PINTLES AND TOWING ATTACHMENTS		25-1
REACH TUBE AND ASSOCIATED HARDWARE	25	25-1
1504 -SPAREWHEEL CARRIER AND TIRE LOCK		26-1
SPARE TIRE CARRIER INSTALLATION	26	26-1
1507 -LANDING GEAR, LEVELING JACKS		27-1
LEVELING JACK ASSEMBLY	27	27-1
GROUP 16 SPRINGS AND SHOCK ABSORBERS		
1601 - SPRINGS		28-1
SPRING ASSEMBLY AND ATTACHING HARDWARE	28	28-1
GROUP 18 BODY, CAB, HOOD, AND HULL		
1801 - BODY, CAB, HOOD, AND HULL ASSEMBLIES		29-1
COVERS	29	29-1
GROUP 22 BODY, CHASSIS, AND HULL ACCESSORY ITEMS		
2202 - ACCESSORY ITEMS		30-1
REFLECTORS, WHEEL CHOCKS, CARGO COVER HOOKS, AND TIE-DOWNS	30	30-1
2210-DATA PLATES AND INSTRUCTION HOLDERS		31-1
DATA PLATES	31	31-1
GROUP 47 GAGES (NONELECTRICAL), WEIGHING AND MEASURING DEVICES		
4701 - INSTRUMENTS		32-1
ODOMETER DRIVE (XM979)	32	32-1
GROUP 94 REPAIR KITS		
9401 - REPAIR KITS		KIT-1
REPAIR KITS	KIT	KIT-1
GROUP 95 GENERAL USE STANDARDIZED PARTS		
9501 - BULK MATERIEL		BULK-1
BULK	BULK	BULK-1

Section III. Special Tools List (Not Applicable)

Section IV. Cross-reference Indexes

National Stock Number Index	I-1
Part Number Index	I-6
Figure and item Number index.	I-18

APPENDIX G ILLUSTRATED LIST OF MANUFACTURED ITEMS	G-1
APPENDIX H TORQUE LIMITS	H-1
INDEX	Index 1

CHAPTER 1
INTRODUCTION

Section I. GENERAL INFORMATION

Paragraph Title	Pa e Number
Destruction of Army Materiel to Prevent Enemy Use	1-1
Maintenance Forms, Records, and Reports	1-1
Preparation for Storage or Shipment	1-1
Reporting Equipment Improvement Recommendations (EIRs)	1-1
Scope	1-1

1-1. SCOPE.

NOTE

Throughout this manual, the terms curbside and roadslde are used to describe views of the trailer. As viewed from the rear, *curbside* is the right side and *roadside* is the left side.

a. **Type of Manual.** Operator's, Organizational, Direct Support, and General Support Maintenance Manual (Including Repair Parts and Special Tools Lists).

b. **Model Numbers and Equipment Names.**

(1) XM979: Chassis, Trailer, 5-Ton, 4-Wheel, Ground Emplacement Mine Scattering System (GEMSS)

(2) XM1061: Trailer, Flatbed, 5-Ton, 4-Wheel

(3) M1061A1: Trailer, Flatbed, 5-Ton, 4-Wheel

(4) XM1073: Trailer, General Purpose, Flatbed,7½-Ton

c. Purpose of Equipment. Used to carry mounted systems over highways and cross-country.

1-2. MAINTENANCE FORMS, RECORDS, AND REPORTS.

Department of the Army forms and procedures used for equipment maintenance will be those prescribed by DA Pam 738-750, *The Army Maintenance Management System (TAMMS).*

1-3. DESTRUCTION OF ARMY MATERIEL TO PREVENT ENEMY USE.

For information on destruction of Army materiel to prevent enemy use, refer to TM 750-244-6.

1-4. PREPARATION FOR STORAGE OR SHIPMENT,

For information on preparing the trailers for storage or shipment, refer to Chapter 4, Section XV.

1-5. REPORTING EQUIPMENT IMPROVEMENT RECOMMENDATIONS (EIRs).

If your trailer needs improvement, let us know. Send us an EIR. You, the user, are the only one who can tell us what you don't like about your equipment. Let us know why you don't like the design. Put it on an SF Form 368 (Product *Quality Deficiency Report).* Mail it to us at: Commander, U.S. Army Tank-Automotive Command, ATTN: AMSTA-MP, Warren, Ml 48397-5000. We'll send you a reply.

Section II. EQUIPMENT DESCRIPTION AND DATA

Paragraph Title	Page Number
Differences Between Models...	1-9
Equipment Characteristics, Capabilities, and Features	1-2
Equipment Data	1-10
Location and Contents of Data Plates	1-8
Location and Description of Major Components	1-3

1-6. EQUIPMENT CHARACTERISTICS, CAPABILITIES, AND FEATURES.

a. The XM979, XM1061, M1061A1, and XM1073 are used to carry mounted systems over highways and cross-country.

b. The XM979, XM1061, M1061A1, and XM1073 are flatbed, tandem axle trailers with the following characteristics:

(1) 24-volt electrical system with power supplied from the towing vehicle receptacle to operate the trailer composite lights.

(2) All trailers have an air/hydraulic brake system which receives air pressure from the towing vehicle through intervehicular air hoses.

(3) The XM979 and XM1061 can be towed safely by a vehicle without airbrake connections through the use of the inertia brake system.

(4) Reach tube on the XM979, XM1061, XM1073, and, if fittied, the M1061A1 provides for tracked vehicle towing.

(5) Leveling jacks on the four corners of the trailers provide stability during loading and off loading.

1-7. LOCATION AND DESCRIPTION OF MAJOR COMPONENTS.

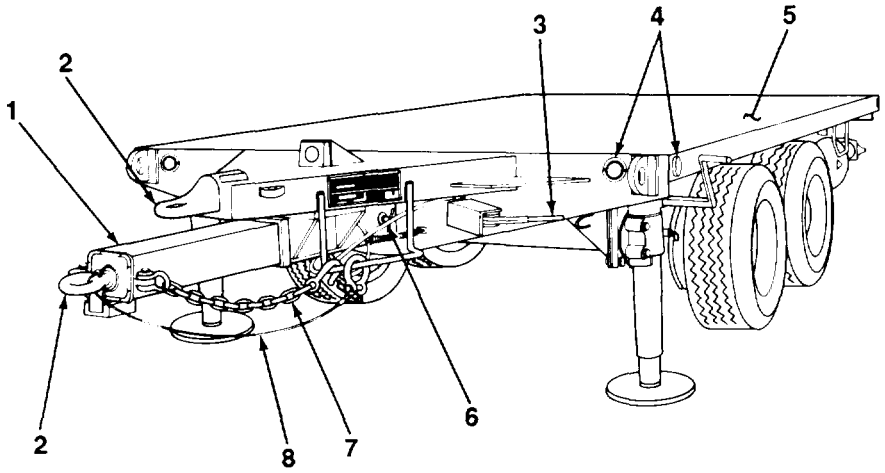

Key	Component	Description
1	Reach Tube (XM979, XM1061 ,and XM1073)	Slides forward and rearward to allow trailer to be towed by a tracked vehicle.
2	Towing Lunette	Used to couple trailer to towing vehicle pintle.
3	Handbrake Lever	Used to activate brakes when trailer is parked or stopped.
4	Reflectors	Indicate presence of trailer to other vehicles.
5	Bed	Used to carry mounted systems.
6	Pin	Locks reach tube into selected position.
7	Safety Chains	Hook to towing shackles on towing vehicle to prevent the trailer from fully breaking away.
8	Inertia Brake Actuator Emergency Brake Cable (XM979 and XM1061)	Applies emergency brakes if trailer breaks away.

TA700898

1-7. LOCATION AND DESCRIPTION OF MAJOR COMPONENTS (Con't).

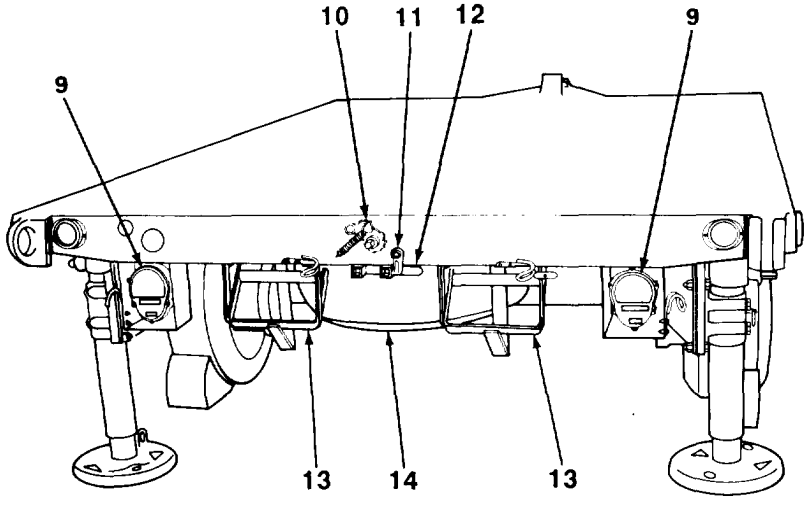

Key	Component	Description
9	Composite Lights	Consist of blackout, service, directional, and stoplights.
10	Locking Pawl	Prevents accidental lowering of spare tire.
11	Handcrank Latch	Stows spare tire carrier handcrank when not in use.
12	Handcrank	Raises and lowers spare tire.
13	Wheel Chock Holder	Stows wheel chocks when not in use.
14	Spare Tire	Mounted in spare tire carrier. Used in case of tire failure.

TA700899

1-7. LOCATION AND DESCRIPTION OF MAJOR COMPONENTS (con't).

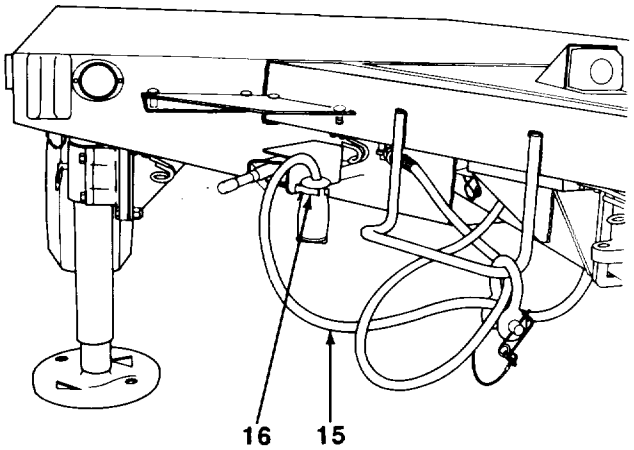

Key	Component	Description
15	Intervehicular Cable Assembly	Connects electrical power from towing vehicle to trailer composite lights.
16	Clip	Stows intervehicular cable assembly connector when not in use.

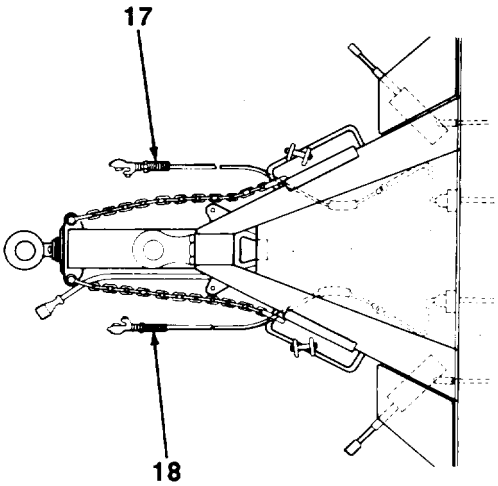

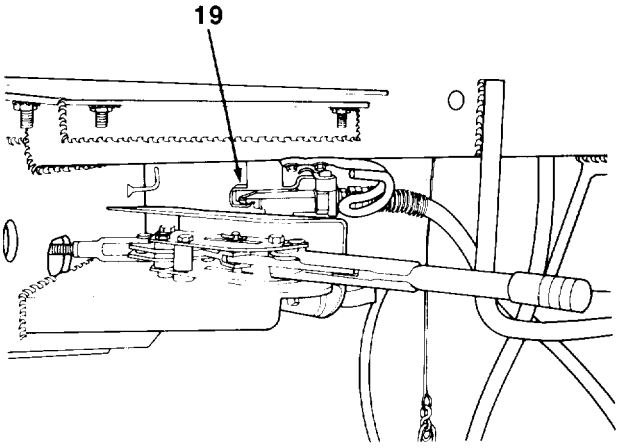

Key	Component	Description
17	Service Air Hose	Connects towing vehicle service air supply to trailer service brakes. Tagged “S”.
18	Emergency Air Hose	Connects towing vehicle emergency air supply to trailer emergency brakes. Tagged “E”. Brakes are actuated when emergency air hose is severed or disconnected.
19	Air Coupling Stowage Brackets	Provide stowage for trailer air couplings when not in use.

TA700900

1-7. LOCATION AND DESCRIPTION OF MAJOR COMPONENTS (Con't).

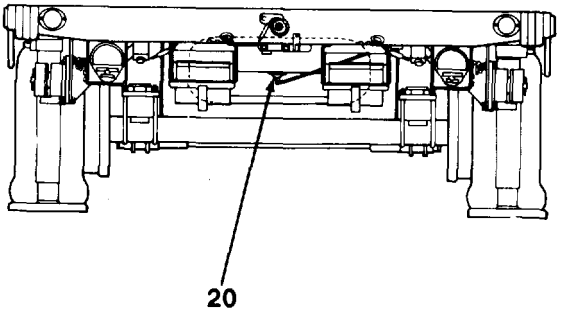

Key	Component	Description
20	Air Reservoir Draincock	Drains air pressure and moisture from air reservoir.

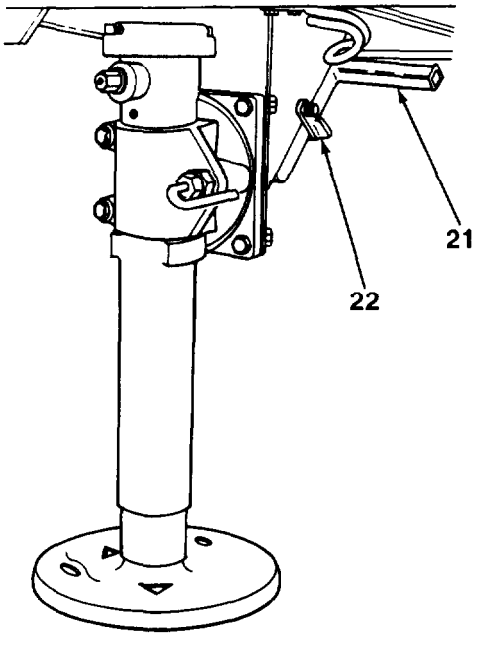

Key	Component	Description
21	Handcrank	Raises and lowers leveling jack leg.
22	Handcrank Latch	Stows handcrank when not in use.

TA700901

1-7. LOCATION AND DESCRIPTION OF MAJOR COMPONENTS (Con't).

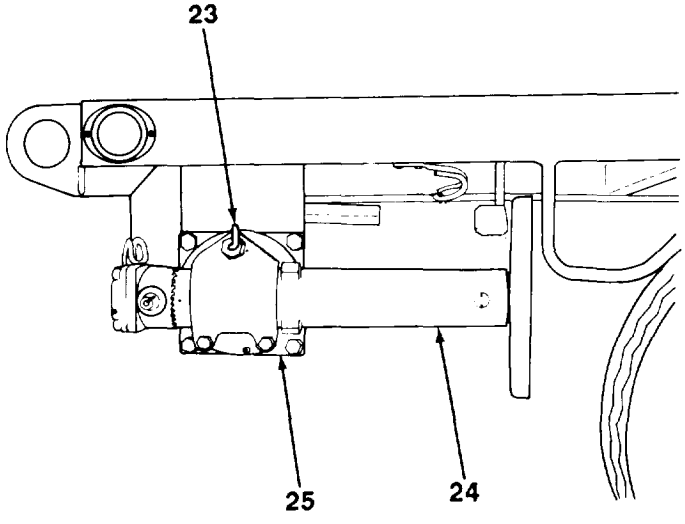

Key	Component	Description
23	Swivel Pin Assembly	Spring-loaded pin locks leveling jack leg into park or travel position.
24	Leveling Jack Leg	Levels and supports trailer. Two front leveling jack legs can be used to support trailer when not coupled to a towing vehicle.
25	Swivel Assembly	Pivots to allow leveling jack leg to swing into park or travel position.

TA700902

1-8. LOCATION AND CONTENTS OF DATA PLATES.

a. The following illustrations show the location and contents of all trailer data plates.

b. If data plates are missing, damaged, or illegible, notify Organizational Maintenance.

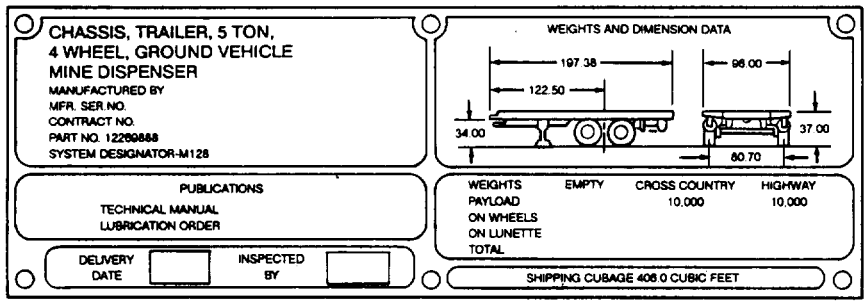

XM979

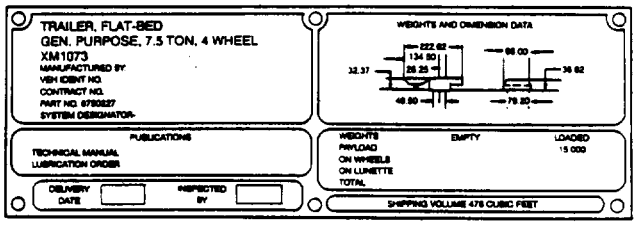

XM1073

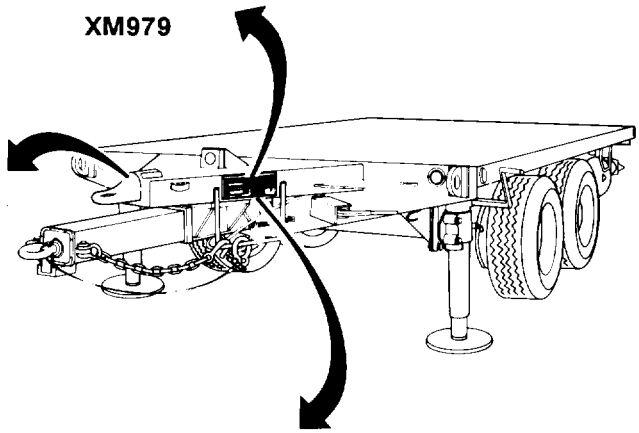

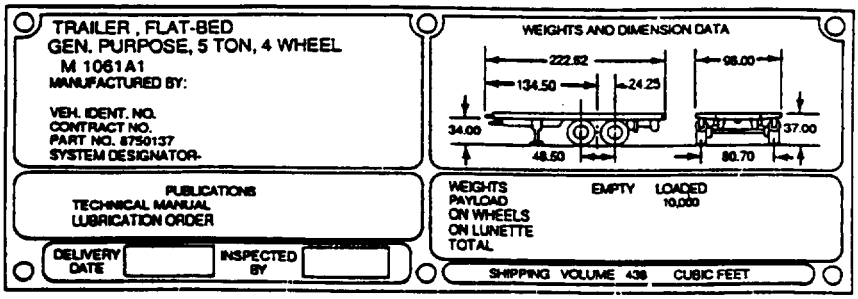

XM1061A1

TA700903

1-8. LOCATION AND CONTENTS OF DATA PLATES (Con't).

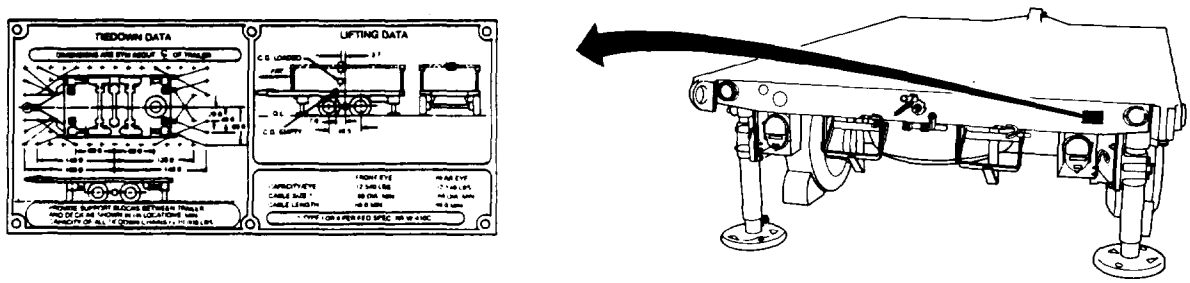

1-9. DIFFERENCES BETWEEN MODELS.

This paragraph describes the differences between the four trailer models covered in this manual.

a. **General.**

(1) Differences between the XM1061 and M1061A1 are due to the longer bed of the M1061A1 and to transportability requirements.

(2) Differences between the XM979 and XM1061, which are the same length, are due to the odometer on the XM979.

(3) The XM1073 can transport a 7½-ton (6810 kg) payload; due to its increased payload capacity, it has a heavier suspension.

b. **Brake System.** The brake systems of the four trailers are designed to handle different types of missions and use different towing vehicles to suit these missions.

(1) The XM979 and XM1061 have an inertia brake system which allows the trailers to be towed by tracked vehicles and an air/hydraulic brake system that applies the trailer brakes when the service brakes of the towing vehicle are applied.

(2) The M1061A1 has an air/hydraulic brake system and may be supplied with the inertia brake system.

(3) The XM1073 handbrake levers apply brakes on both front and rear axles.

TA700904

1-10. EQUIPMENT DATA.

XM979 and XM1061	
General:	
Towing Vehicle	5-Ton, M809 and M113 Series
Angle of Departure	25°
Weights:	
Chassis	5500 lb (2497 kg)
Payload	10,000 lb (4540 kg)
Total	15,500 lb (7037 kg)
Dimensions:	
Ground Clearance	15.0 in. (38.1 cm)
Height:	
Unloaded	37.0 in. (93.98 cm)
Loaded	36.25 in. (92.08 cm)
Width	96.0 in. (243.84 cm
Total Length	217.38 in. (552.15 cm)
Bed Size	142.75 x 96.0 in. (362.59 x 243.84 cm)
Maximum Towed Speed:	
Cross-country	10 mi/h (16 km/h)
Highway	50 mi/h (80 km/h)
Maximum Tire Pressure:	
Cross-country and Highway	65 psi (448 kPa)

M1061A1	
General:	
Towing Vehicle	5-Ton, M809 Series
Angle of Departure	22°
Weights:	
Chassis	5850 lb (2656 kg)
Payload	10,000 lb (4540 kg)
Total	15,850 lb (7196 kg)
Dimensions:	
Ground Clearance	15.0 in. (38.1 cm)
Height:	
Unloaded	37.0 in. (93.98 cm)
Loaded	36.25 in. (92.08 cm)
Width	96.0 in. (243.84 cm)
Total Length	242.62 in. (61 6.25 cm
Bed Size	168.0 x 96.0 in. (426.72 x 243.84 cm)

1-10. EQUIPMENT DATA (Con't).

M1061A1 (Con't)	
Maximum Towed Speed:	
Cross-country	10 mi/h (16 km/h)
Highway	50 mi/h (80 km/h)
Maximum Tire Pressure:	
Cross-country and Highway	65 psi (448 kPa)

XM1073	
General:	
Towing Vehicle	5-Ton, M809 and M113 Series
Angle of Departure	25°
Weights:	
Payload	15,000 lb (6810 kg)
Dimensions:	
Height (Unloaded)	38.62 in. (98.09 cm)
Width	96.0 in. (243.84 cm)
Total Length	222.62 in. (565.45 cm)
Maximum Towed Speed:	
Cross-country	10 mi/h (16 km/h)
Highway	50 mi/h (80 km/h)
Maximum Tire Pressure:	
Cross-country and Highway	100 psi (690 kPa)

Section III. TECHNICAL PRINCIPLES OF OPERATION

1-11. BRAKE SYSTEM.

a. **General.** This paragraph discusses the normal and emergency operation of the two brake systems found on the trailers. The brake system used will depend on the towing vehicle.

(1) The XM979 and XM1061 can use either the air/hydraulic brake system or the inertia brake system.

(2) The M1061A1 and XM1073 use an air/hydraulic brake system only.

(3) The M1061A1 may also be supplied with the inertia brake system.

b. **Air/Hydraulic Brake System (All Models).**

(1) Normal Operation.

(a) When the driver of the towing vehicle applies the brakes, air pressure from the towing vehicle is sent to the air coupling (4) and into the air hose (5) of the trailer. Air pressure in the trailer air hoses then operates a diaphragm located in the airbrake chambers (9) next to the master cylinders (8).

(b) The diaphragm in the airbrake chambers (9) converts air pressure to hydraulic pressure when it pushes a piston in the master cylinders (8) and sends brake fluid through the hydraulic tubes (7) to the wheel cylinders (1 3).

(c) The wheel cylinders (13) change the hydraulic pressure into mechanical action. When the wheel cylinders are pressurized, they push the brakeshoes (12) against the brakedrum (14) and stop the trailer.

(d) When the towing vehicle brakes are released, pressure is released and the trailer brakes are also released.

(2) **Emergency Operation.**

(a) Emergency braking for the air/hydraulic brake system is activated when the emergency air hose (16) is either disconnected or severed. The air pressure in the air reservoir (10) is released into the relay valve (15) when there is a drop in pressure due to the severed or disconnected emergency air hose. The relay valve then directs the air to the airbrake chambers (9), braking the trailer as in normal operation.

(b) The emergency brakes can be released quickly by pulling the air tank drain handle (11). This releases all air pressure in the air reservoir (10), thereby opening the relay valve (15).

c. Inertia Brake System (XM979 and XM1061).

(1) Normal Operation.

(a) As the driver of the towing vehicle applies the brakes, slowing down the vehicle, the actuator (2) compresses when the trailer starts to overtake the towing vehicle. When the actuator compresses, it forces brake fluid from the actuator's master cylinder (3) into the hydraulic hoses and tubes (6 and 7), increasing the hydraulic pressure to the wheel cylinders (13).

(b) The wheel cylinders (13) change the hydraulic pressure to mechanical motion. When the wheel cylinders are pressurized they push the brakeshoes (12) against the brakedrum(14) and stop the trailer.

(c) The actuator (2) has a spring that acts like a shock absorber to eliminate jerky towing lunette (1) movement and unnecessary braking of the trailer.

1-11. BRAKE SYSTEM (Con't).

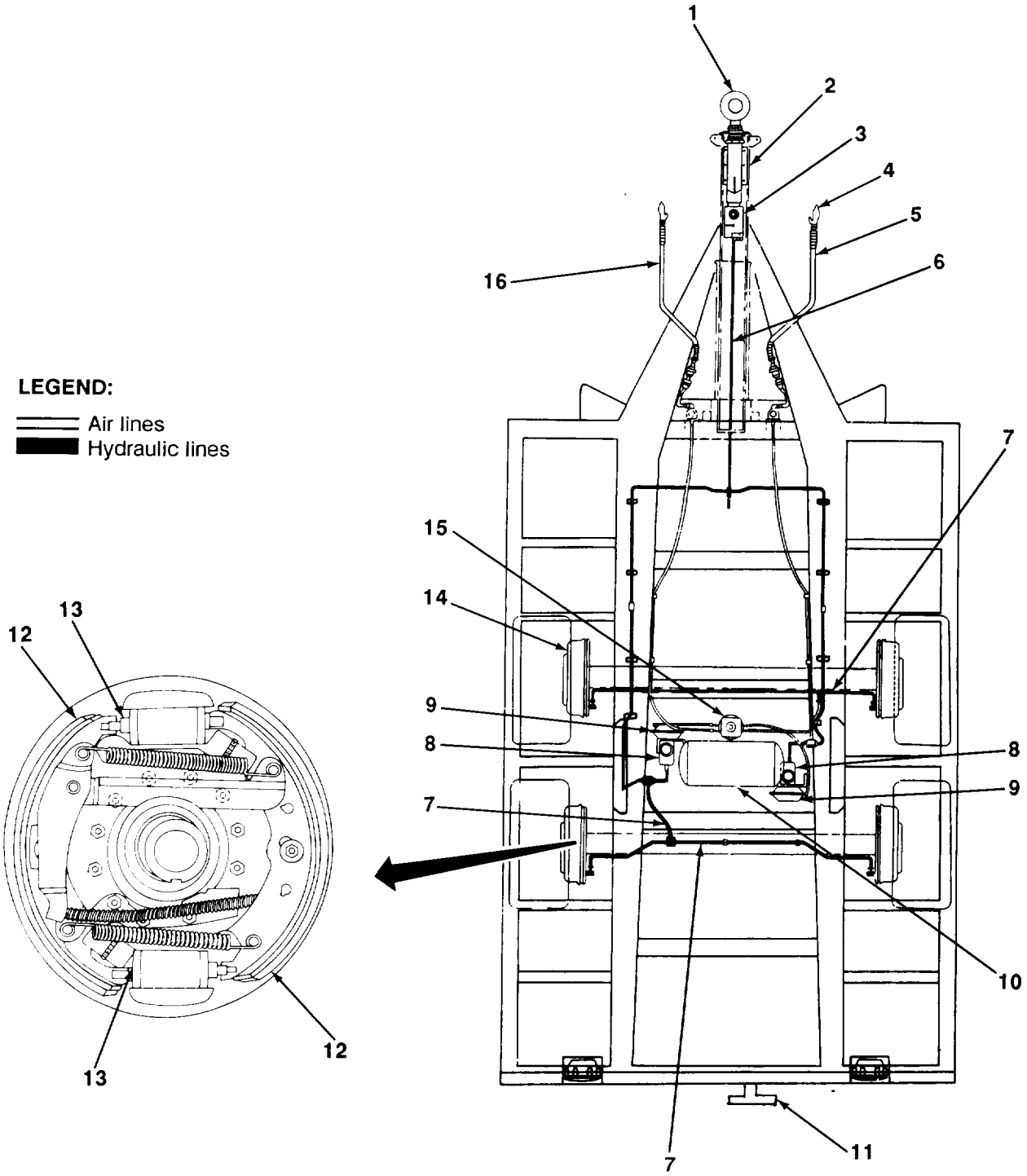

TA700905

1-11. BRAKE SYSTEM (Con't).

(2) **Emergency Operation.**

(a) The emergency brake cable (17) attached to the towing vehicle pulls on the emergency brake lever (19) when the trailer breaks away from the towing vehicle. The lever movement forces the master cylinder (3) to release brake fluid, braking the trailer as in normal operation.

(b) The trailer brakes can be released quickly by pulling on the emergency brake release cable (18).

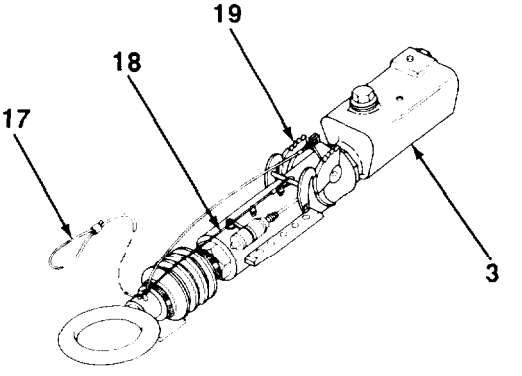

TA700906

CHAPTER 2
OPERATING INSTRUCTIONS

Section I. DESCRIPTION AND USE OF OPERATOR'S CONTROLS AND INDICATORS

Paragraph Title	Page Number
Controls and Indicators	2-1
General	2-1

2-1. GENERAL.

This section shows the location and describes the function of all trailer controls and indicators. Review this section thoroughly before operating the trailers.

2-2. CONTROLS AND INDICATORS.

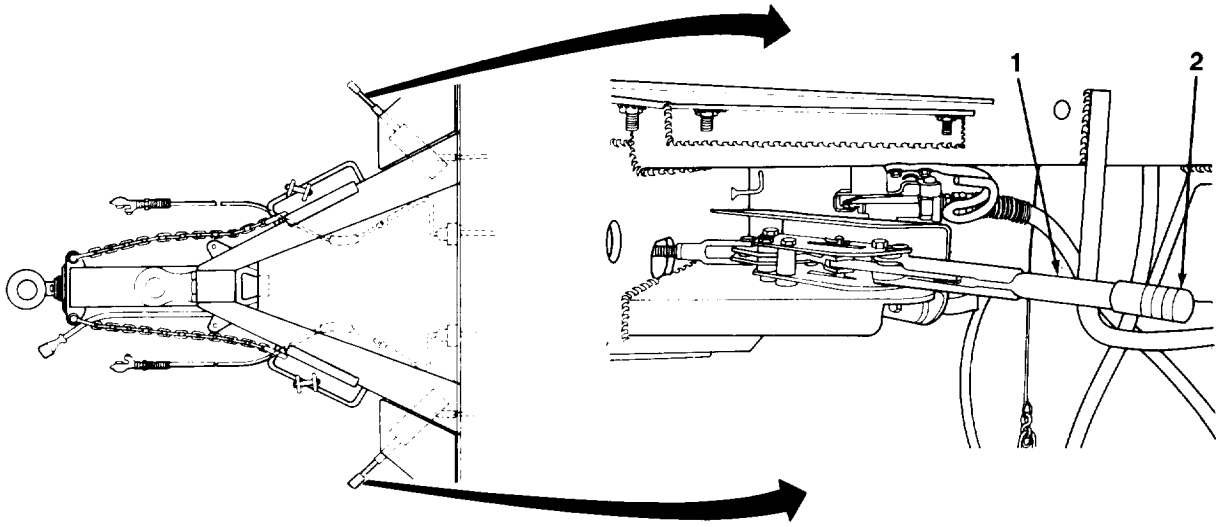

Key	Control or Indicator	Function
1	Handbrake Lever	Applies or releases handbrakes. Pull to front to apply. Push to rear to release.
2	Adjustment Knob	Adjusts handbrake lever when turned.

TA700907

2-2. CONTROLS AND INDICATORS (Con't).

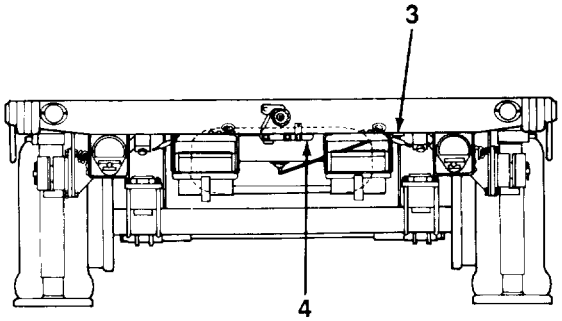

Key	Control or Indicator	Function
3	Air Tank Drain Handle	Opens air reservoir draincock. On XM1073, handle is located at curbside siderail.
4	Handcrank	Operates shaft to raise and lower spare tire in spare tire carrier.

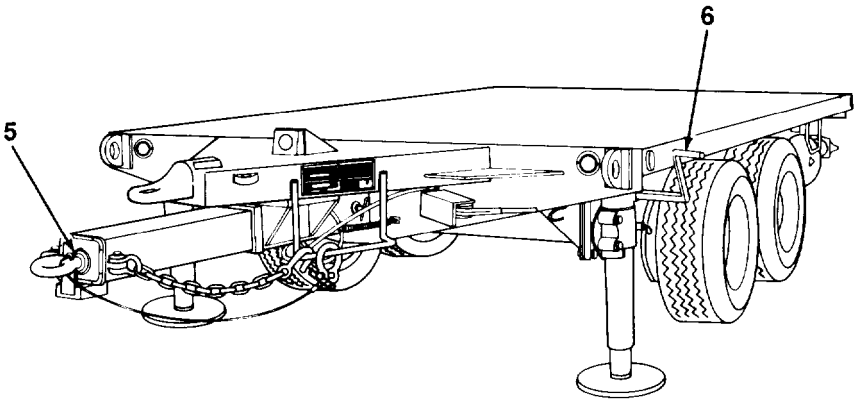

Key	Control or Indicator	Function
5	Inertia Brake Actuator Emergency Brake Release Cable (XM979 and XM1061)	Releases emergency brakes when pulled.
6	Handcrank	Raises and lowers leveling jack leg.

TA700908

Section II. OPERATOR/CREW PREVENTIVE MAINTENANCE CHECKS AND SERVICES (PMCS)

Paragraph Title	Page Number
General	2-3
General PMCS Procedures	2-3
Leakage Definitions	2-4
Operator/Crew Preventive Maintenance Checks and Services (PMCS), Table 2-1	2-5
Reporting Repairs	2-3
Service intervals	2-3
Specific PMCS Procedures	2-4

2-3. GENERAL.

a. To ensure that the trailers are ready for operation at all times, they must be inspected on a regular basisso that defects may be found before they result in serious damage, equipment failure, or injury to personnel. This section contains systematic instructions on inspections, adjustments, and corrections to be performed by the operator/crew.

b. While performing PMCS, read and follow all safety instructions found in the Warning Summary at the front of this manual. Keep in mind all WARNINGs and CAUTIONS.

2-4. SERVICE INTERVALS.

Perform PMCS, found in Table 2-1, at the following intervals:

(1) Perform *Before* (B) PMCS just before operating the trailer.

(2) Perform During (D) PMCS while operating the trailer.

(3) Perform After (A) PMCS right after operating the trailer.

(4) Perform Weekly (W) PMCS once each week.

2-5. REPORTING REPAIRS.

All defects that the operator cannot fix must be reported on DA Form 2404, *Equipment Inspection and Maintenance Worksheet,* immediately after completing PMCS. If a serious problem is found, IMMEDIATELY report it to your supervisor.

2-6. GENERAL PMCS PROCEDURES.

WARNING

Dry cleaning solvent, P-D-680, is toxic and flammable. Always wear protective goggles and gloves, and use only in a well-ventilated area. Avoid contact with skin, eyes, and clothes, and DO NOT breathe vapors. DO NOT use near open flame or excessive heat. The solvent's flash point is 100°F-138°F (38°C-59°C). If you become dizzy while using cleaning solvent, immediately get fresh air and medical help. If solvent contacts eyes, immediately wash your eyes and get medical aid.

a. Keep equipment clean. Dirt, oil, and debris may cover up a serious problem. Clean as you work and as needed. Use dry cleaning solvent (Item 14, Appendix E) on all metal surfaces. Use detergent (Item 6, Appendix E) and water on rubber, plastic, and painted surfaces.

2-6. GENERAL PMCS PROCEDURES (Con't).

b. While performing specific PMCS procedures, inspect the following components:

(1) **Bolts, Nuts, and Screws.** Ensure that they are not loose, missing, bent, or broken. Report loose or missing bolts, nuts, and screws to Organizational Maintenance.

(2) **Welds.** Inspect for gaps where parts are welded together. Check for loose or chipped paint, rust, and cracks. Report bad welds to Organizational Maintenance.

(3) **Electric Conduit, Wires, or Connectors.** Inspect for cracked or broken conduit insulation, bare wires, and loose or broken connectors. Report loose connections and faulty wiring to Organizational Maintenance.

(4) **Hoses, Lines, and Fittings.** Inspect for wear, damage, and leaks. Ensure that clamps and fittings are tight. Report any damage, leaks, or loose fittings and clamps to Organizational Maintenance.

c. Check that components are adequately lubricated in accordance with Chapter 3, Section I.

2-7. SPECIFIC PMCS PROCEDURES.

a. Operator/crew PMCS are provided in Table 2-1. Always perform PMCS in the order listed, Once it becomes a habit, anything that is not right can be spotted in a minute.

b. Before performing PMCS, read all the checks required for the applicable interval and prepare all the tools needed. Have several clean rags (item 12, Appendix E) handy. Perform ALL inspections at the applicable interval.

c. if anything wrong is discovered through PMCS, perform the appropriate troubleshooting task in Chapter 3, Section II. if any component or system is not serviceable, or if a given service does not correct the problem, notify your supervisor.

d. The columns in Table 2-1 are defined as follows:

(1) **Item No.** Provides a logical sequence for PMCS to be performed and is used as a source of item numbers for the "TM ITEM NO" column when recording PMCS results on DA Form 2404.

(2) **Interval.** Specifies the interval at which PMCS is to be performed.

(3) **Item to be Inspected.** Lists the system and common name of items that are to be inspected. Included in this column are specific servicing, inspection, replacement, or adjustment procedures to be followed.

NOTE

The terms "ready/available" and "mission-capable" refer to the same status: equipment is on hand and is able to perform its combat missions (AR 700-138).

(4) Equipment is Not/Ready Available If: Explains when the trailer is nonmission-capable.

2-8. LEAKAGE DEFINITIONS.

a. It is important to know how fluid leakage affects the status of the trailer. Following are types/classes of leakage an operator must know to determine whether the trailer is mission-capable. Learn these leakage definitions. When in doubt, notify your supervisor.

Leakage Definitions for Operator/Crew PMCS

Class I	Seepage of fluid (as indicated by wetness or discoloration) not great enough to form drops.
Class II	Leakage of fluid great enough to form drops, but not great enough to cause drops to drip from item being inspected.
Class III	Leakage of fluid great enough to form drops that fall from item being inspected.

2-8. LEAKAGE DEFINITIONS (Con't).

CAUTION

When operating with Class I or II leaks, check fluid levels more frequently than required by PMCS. Parts without fluid will stop working or may be damaged.

b. Equipment operation is allowed with minor (Class I or II) leakage. Fluid levels in an item/system affected with such leakage must be checked more frequently than required in PMCS. When in doubt, notify your supervisor.

c. Report Class Ill leaks IMMEDIATELY to your supervisor.

Table 2-1. Operator/Crew Preventive Maintenance Checks and Services (PMCS).

B-BEFORE D-DURING A-AFTER W–WEEKLY

ITEM NO.	INTERVAL B	D	A	W	ITEM TO BE INSPECTED PROCEDURE Check for and have repaired, filled, or adjusted as needed.	EQUIPMENT IS NOT READY/AVAILABLE IF
					NOTE Ž**Perform *Weekly(W)* as well as *Before* (B) PMCS if:** **a. You are the assigned operator but have not operated the vehicle since the last weekly.** **b. You are operating the vehicle for the first time.** **• Perform the following checks/services BEFORE coupling trailer to towing vehicle.**	
1					**TOWING LUNETTE AND SAFETY CHAINS**	
	●				a. Check towing lunette for secure mounting and obvious damage.	Towing lunette cracked, loose, bent, or welds cracked.
	●				b. Check safety chains for secure mounting and obvious damage.	Safety chains missing or mounting cracked.
2					**INTERVEHICULAR AIR HOSES**	
	●				Inspect trailer air couplings and air hoses for damage. Clean dirt from mounting surfaces of air couplings as required (para 3-8).	Air hose or coupling and air hoses broken, missing, or preformed packing missing.

Table 2-1. Operator/Crew Preventive Maintenance Checks and Services (PMCS) (Con't).

B–BEFORE D-DURING A–AFTER W–WEEKLY

ITEM NO.	INTERVAL B	D	A	W	ITEM TO BE INSPECTED PROCEDURE Check for and have repaired, filled, or adjusted as needed.	EQUIPMENT IS NOT READY/AVAILABLE IF:
3					**ELECTRICAL CONNECTION AND WIRING**	
	●				a. Visually inspect electrical connector (1) for damage. Inspect insert (2) for signs of deterioration or arcing. inspect contacts (3) for dirt, bends, burns, or damage.	
	●				b. Visually inspect wiring harness, clips, and shells for correct assembly and good condition.	
				●	c. Clean electrical connector (1) (para 3-7).	

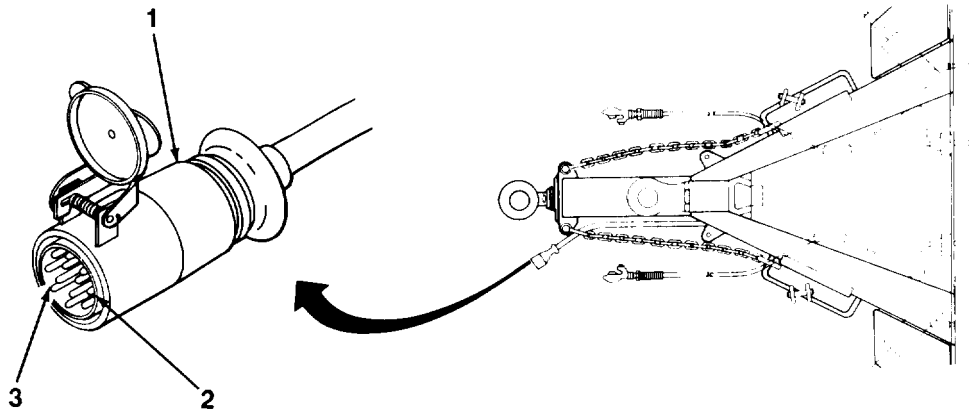

					NOTE **Perform the following checks/services AFTER coupling trailer to towing vehicle.**	
4					**LEVELING JACKS**	
	●				Check for damage and secure mounting. Check that leveling jack legs extend and retract smoothly.	Any leveling jack loose, damaged, or inoperative
5					**HANDBRAKES**	
	●				With trailer coupled to towing vehicle, apply handbrakes. Move trailer slightly to see if handbrakes hold the wheels. If not, adjust handbrake levers (para 3-10).	Handbrakes fail to operate or do not hold wheel.
6					**WHEELS**	
	●				Check wheels for damage and wheel nuts for tightness and presence.	One wheel damaged. One or more wheel nuts missing.

TA700909

Table 2-1. Operator/Crew Preventive Maintenance Checks and Services (PMCS) (Con't).

B-BEFORE D-DURING A–AFTER W–WEEKLY

ITEM NO.	INTERVAL B	D	A	W	ITEM TO BE INSPECTED PROCEDURE: Check for and have repaired, filled, or adjusted as needed.	EQUIPMENT IS NOT READY/AVAILABLE IF:
7					**TIRES**	
	●				Check tires for damage or low pressure. Correct cool tire pressure is: All Except XM1073 . . . . . 65 psi (448 kPa) XM1073 . . . . . 100 psi (690 kPa)	One tire flat, missing, or unserviceable.
8					**LIGHTS AND REFLECTORS**	
					NOTE **An assistant is needed when checking the brake lights.**	
	●				a. Check operation of composite lights or stoplights (if tactical situation permits).	Lights do not operate for night mission.
	●				b. Check for damaged or missing reflectors.	
9					**BRAKE SYSTEMS**	
		●			a. While an assistant actuates the service brakes, listen for air leaks at air couplings, relay valves, and air reservoir.	Air leaks are found. Service brakes do not operate.
	●				b. Check for brake fluid leaks at master cylinders, hydraulic lines, and at wheels.	Any leaks are found
		●			c. On trailer equipped with inertia brake system, actuate the service brakes during operation.	Service brakes fail to stop trailer.
		●			d. Be alert for unusual difficulty that would indicate that the service brakes are malfunctioning.	Service brakes fail to stop trailer.
					WARNING **Cautiously feel each wheel hub and brakedrum. Serious burns can result from touching an overheated brakedrum.**	
		●			e. During halts, cautiously feel brakedrums and hubs for overheated condition. Hot brakedrum indicates dragging brakes.	
10					**OPERATION**	
		●			Ensure that trailer is tracking correctly with no side pull. Be alert for any unusual noises while towing the trailer. Stop and investigate any unusual noises.	

Table 2-1. Operator/Crew Preventive Maintenance Checks and Services (PMCS) (Con't).

B-BEFORE D-DURING A-AFTER W-WEEKLY

ITEM NO.	INTERVAL B	D	A	W	ITEM TO BE INSPECTED PROCEDURE: Check for and have repaired, filled, or adjusted as needed.	EQUIPMENT IS NOT READY/AVAILABLE IF:
11					**AIR RESERVOIR**	
			●		a. Pull air tank drain handle to drain condensation (para 3-9).	Air reservoir damaged or leaking
				●	b. Visually inspect air reservoir for damage or leaks.	
12					**SUSPENSION SYSTEM**	
				●	Check springs, hardware, and suspension for looseness or damage.	Loose, damaged, or missing suspension components.
13					**MISCELLANEOUS ASSEMBLIES**	
				●	Check assemblies such as airbrake chamber, master cylinder, and handbrake levers for looseness of mounting or connections.	

Section III. OPERATION UNDER USUAL CONDITIONS

Paragraph Title	Page Number
Coupling Trailer to Towing Vehicle	2-9
General	2-9
Operating Leveling Jacks	2-16
Operating Spare Tire Carrier	2-17
Preparation for Lifting	2-18
Towing Instructions	2-13
Uncoupling Trailer fromTowing Vehicle	2-14

2-9. GENERAL.

a. This section contains instructions for safely operating the trailers under usual conditions. Unusual operating conditions are defined and described infection lV of this chapter.

b. Perform all Before (B) PMCSinTable 2-1 before operating the trailer.

c. Review all towing vehicle operating instructions before coupling or uncoupling trailer.

2-10. COUPLING TRAILER TO TOWING VEHICLE.

a. Remove wheel chocks (1) from holders (2) and place under rearmost tires.

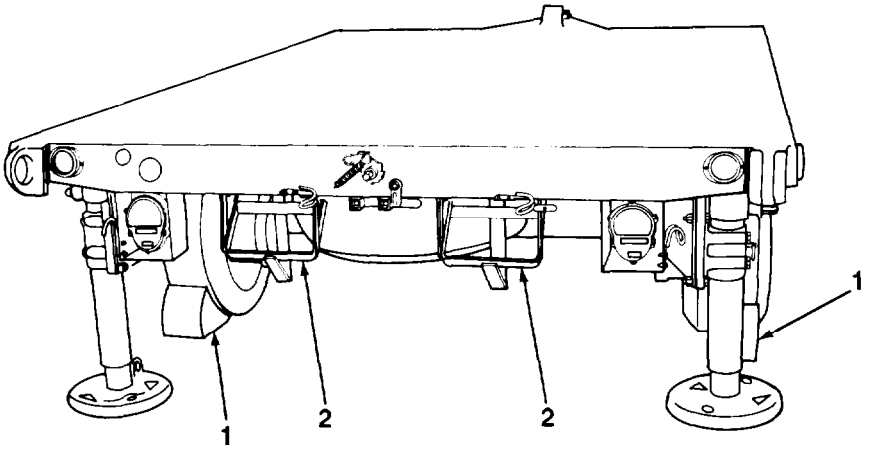

TA700910

2-10. COUPLING TRAILER TO TOWING VEHICLE (Con't).

b. Remove safety pin (3) on towing vehicle and pull up on locking latch (4) to lift pintle upper jaw (5).

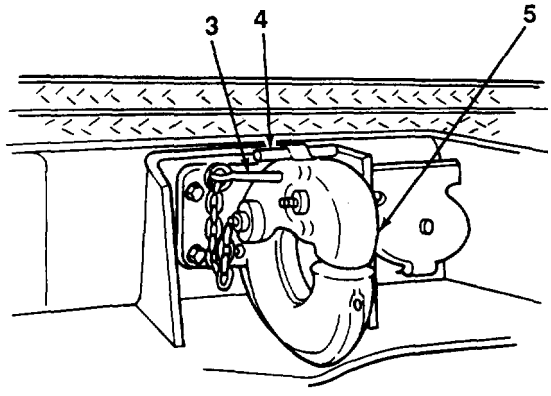

WARNING

All personnel must stand clear of towing vehicle and trailer during coupling operation. Failure to follow this warning may result in serious injury or death.

CAUTION

Have assistant direct you during backing operations. Damage to equipment may occur if caution is not followed.

c. Aline towing vehicle with appropriate trailer towing lunette (6).

NOTE

Reach tube is not found on all M1061A1 models.

d. If necessary, remove retaining pin (9) and pin (10). Extend or retract reach tube (8), using an assistant as required. Install pin and retaining pin to secure reach tube.

e. Back towing vehicle in front of towing lunette (6). Operate front leveling lacks to raise towing lunette (para 2-13). Back towing vehicle until pintle hook (16) is directly under towing lunette. Lower towing lunette onto pintle hook.

f. Push down and close pintle upper jaw (5). Check that locking latch (4) is locked by pulling up on pintle upper jaw. Insert safety pin (3).

g. Raise and stow front and rear leveling jacks in travel position (para 2-13).

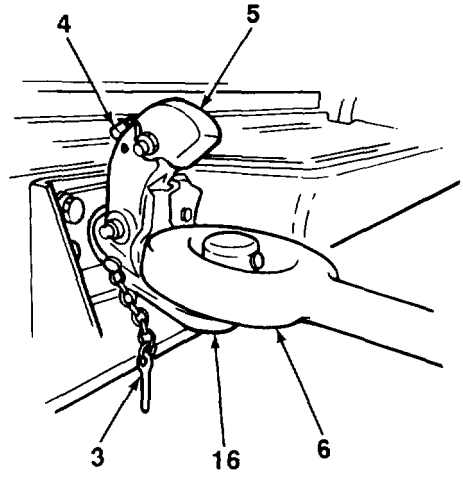

TA700911

2-10. COUPLING TRAILER TO TOWING VEHICLE (Con't).

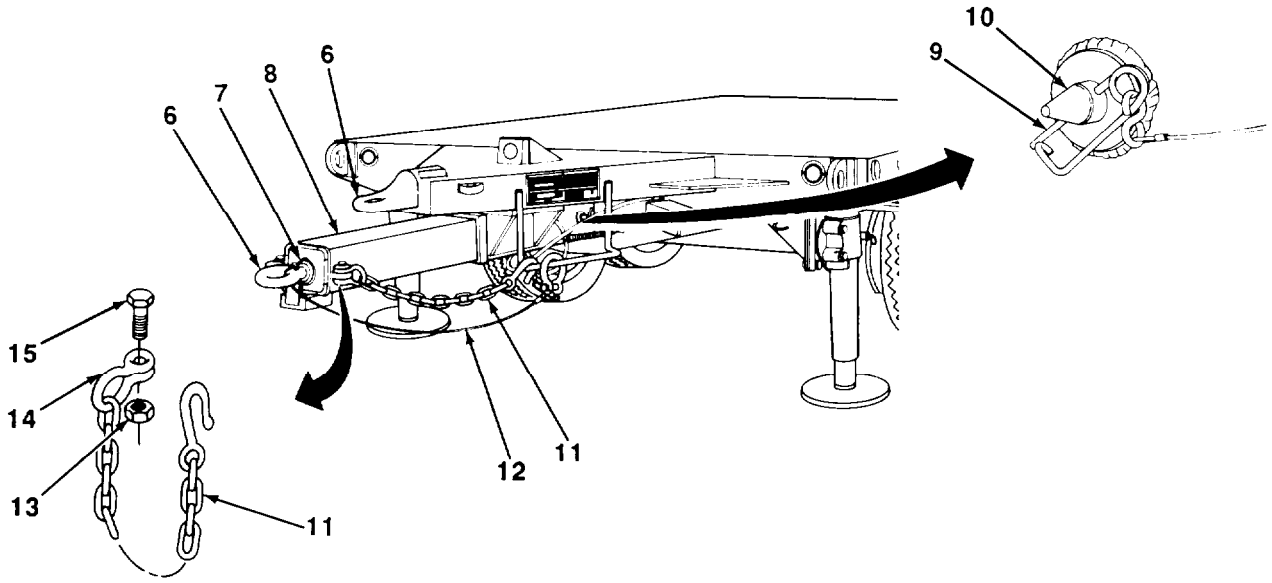

NOTE

- **Safety chains should be mounted near whichever towing lunette** is used. **Perform steps h and i if safety chains have to be moved.**
- **On M1061A1, shackles are mounted to reach tube with screws and self-locking nuts. On all other model trailers, shackles are mounted with screw-type pins.**

h. Unstow safety chains (11). Remove two self-locking nuts (13) and screws (15), or screw-type pins, shackles (14), and safety chains,

i. Install two safety chains (11) and shackles (14) with screws (15) and self-locking nuts (13) or screw-type pins in required location.

CAUTION

Safety chains are crossed under towing lunette to prevent trailer from fully breaking away if trailer detaches from towing vehicle. Ensure that there is enough slack in safety chains to allow trailer to make full turns without being damaged.

j. Cross two safety chains (11) under towing lunette (6) and hook to towing vehicle. Secure safety chains to prevent them from dragging.

CAUTION

Ensure that inertia brake actuator emergency brake cable is fully released. If cable is not fully released, brakes will drag, heat up, and burn out.

NOTE

Step k applies only if inertia brake system is used. If air/hydraulic brakes are to be used, proceed to step l.

k. Attach inertia brake actuator emergency brake cable (12) to towing vehicle. Ensure that brakes are fully released. If brakes are applied, pull emergency brake release cable (7). Proceed to step m.

TA700912

2-10. COUPLING TRAILER TO TOWING VEHICLE (Con't).

NOTE

Be sure to check SERVICE and EMERGENCY tag markings on air hose assemblies on both trailer and towing vehicle before connecting.

l. Unstow and connect service air coupling (17) and emergency air coupling (19) to towing vehicle air couplings. Open towing vehicle shut-off valves (refer to towing vehicle operator's manual).

m. Unstow intervehicular cable assembly connector (20) from clip. Connect intervehicular cable assembly connector to towing vehicle electrical receptacle.

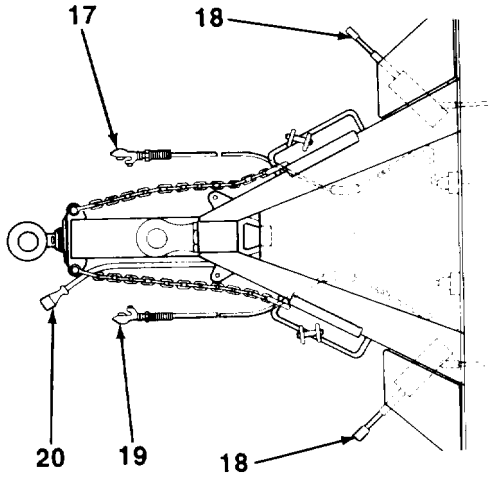

n. Return two wheel chocks (1) to holders (2).

o. Release handbrakes by moving two handbrake levers (18) rearward.

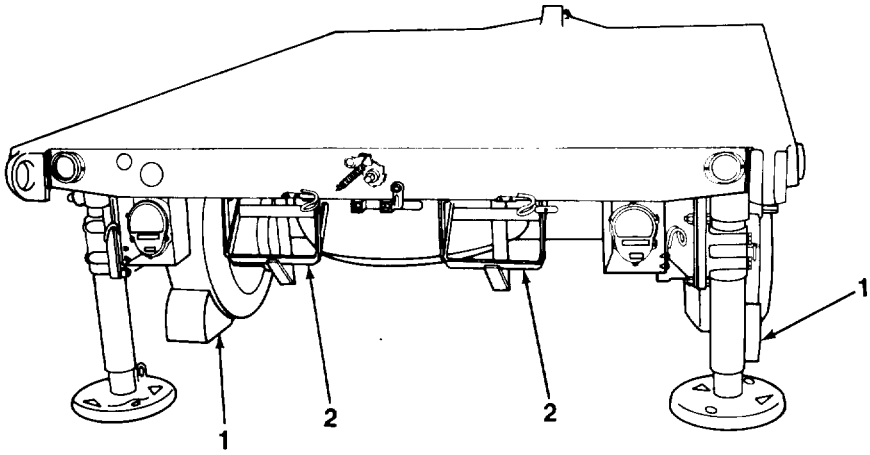

TA700913

2-11. TOWING INSTRUCTIONS.

NOTE

Refer to FM 21-305 for further information on proper driving practices.

a. Driving.

CAUTION

Sudden stops may cause drawbar to bend or buckle and may also cause severe damage to inertia brake actuator.

(1) When trailer is coupled, always start and stop the towing vehicle slowly and gradually. Do this whether the trailer is loaded or not.

(2) Never exceed the maximum speed of 50 mi/h (80 km/h) highway and 10 mi/h (16 km/h) cross-country.

(3) When driving the towing vehicle and trailer, overall length of the unit must be kept in mind when turning and passing other vehicles. Because the unit is hinged in the middle, turning and backing are also affected. Heavier payloads will increase stopping distance and decrease off-road maneuverability.

CAUTION

Tight turns may cause severe damage to inertia brake actuator.

b. **Turning.** When turning corners, allow for the fact that the trailer wheels turn inside the turning radius of the towing vehicle . To make a right turn at a road intersection, drive the towing vehicle part way into the intersection and then cut sharply to the right. This will allow for the turning radius of the trailer and keep it off the curb.

c. **Backing.**

CAUTION

Jackknifing when backing may cause severe damage to inertia brake actuator.

(1) Always back the towing vehicle slowly and gradually.

(2) Whenever possible, use an assistant driver or another person to act as a ground guide.

(3) When backing, the rear of the trailer will move in the opposite direction in which the towing vehicle is turned. When the towing vehicle is turned to the right, the rear of the trailer will go left. When the towing vehicle has turned and backing in a straight line is required, turn the towing vehicle in the direction the trailer is moving. This will slowly bring the towing vehicle and trailer into a straight line.

d. **Stopping.** In normal operation, the brakes of the towing vehicle and trailer are applied at the same time when the driver steps on the brake pedal. Brake pressure must be applied gradually and smoothly. With some towing vehicles, the trailer brakes can be applied separately by using a brake control (refer to towing vehicle operator's manual). On steep grades or slippery surfaces, the trailer brakes should be applied before the towing vehicle brakes, if possible. This will reduce the possibility of jackknifing the trailer.

e. **Parking.** When the towing vehicle and trailer are to be left unattended, set the towing vehicle parking brake, turn off the engine, and set the wheel chocks (para 2-12).

2-12. UNCOUPLING TRAILER FROM TOWING VEHICLE.

a. Lower front and rear leveling jacks to park position (para 2-13).

b. Position two wheel chocks behind rearmost tires.

c. Apply handbrakes by moving two handbrake levers (1) forward.

d. Disconnect intervehicular cable assembly connector (2) from towing vehicle electrical receptacle and stow in clip (3).

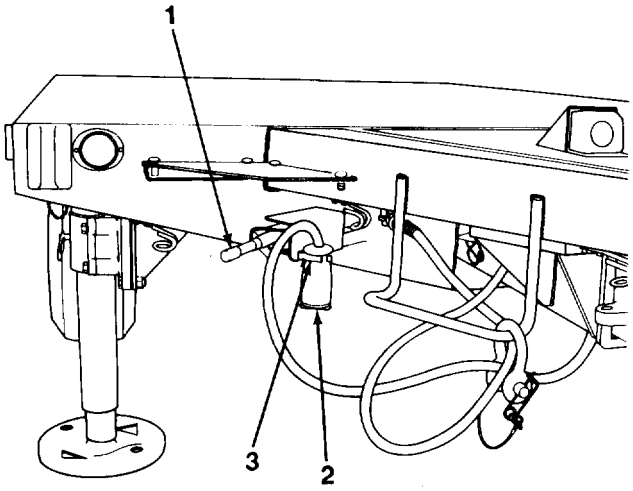

e. If air/hydraulic brakes were used, disconnect emergency air coupling (5) and service air coupling (4) from towing vehicle air couplings. Stow in two stowage brackets (6). Close towing vehicle shut-off valves (refer to towing vehicle's operator's manual).

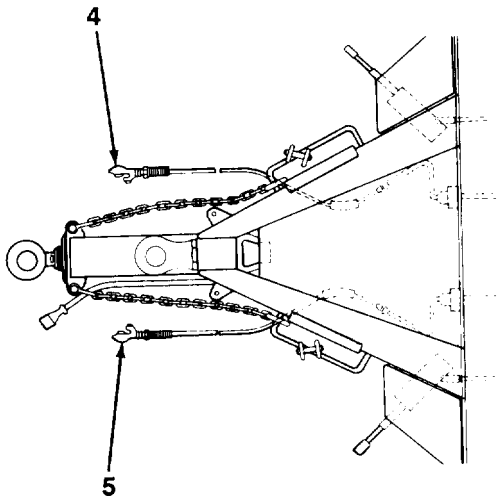

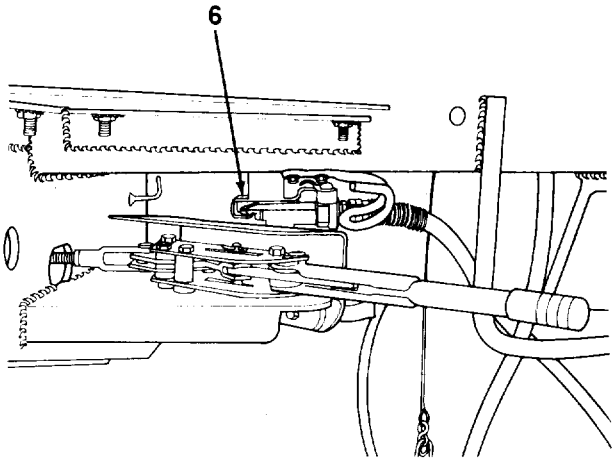

TA700914

2-12. UNCOUPLING TRAILER FROM TOWING VEHICLE (Con't).

f. If inertia brake system was used, disconnect emergency brake cable (11) from towing vehicle.

g. Unhook two safety chains (10) from towing vehicle and stow on trailer.

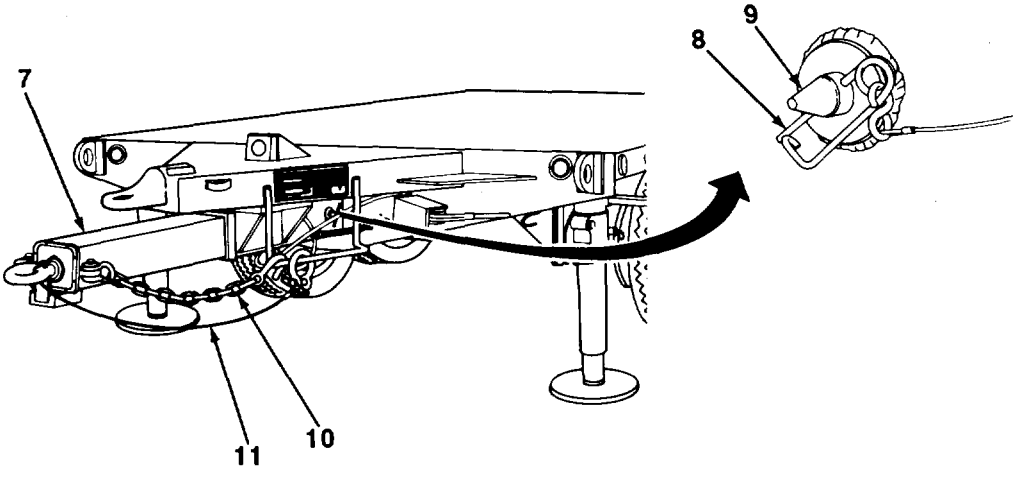

h. Remove safety pin (16) on towing vehicle and pull up on locking latch (12) to lift pintle upper jaw (13).

i. Operate front leveling jacks to raise towing lunette (14) off pintle hook (15) (para 2-1 3). Slowly move towing vehicle forward to clear towing lunette.

j. Push down and close pintle upper jaw (13). Ensure that locking latch (12) is locked by pulling upon upper jaw. Insert safety pin (16).

k. If reach tube (7) was used, remove retaining pin (8) and pin (9). Push reach tube fully in using an assistant as required. Install retaining pin and pin to secure reach tube.

l. Drain air pressure from air reservoir (para 3-9).

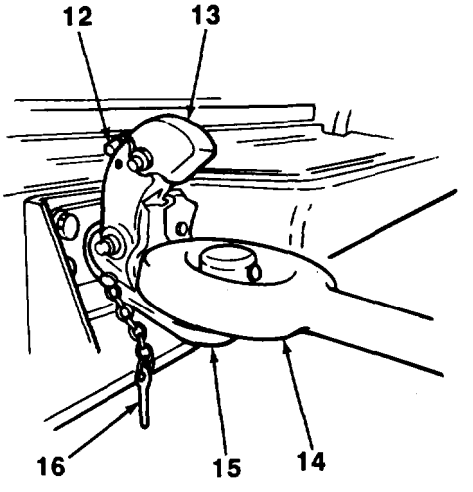

TA700915

2-13. OPERATING LEVELING JACKS.

CAUTION

Lower and raise all leveling jacks in increments. Lowering and raising one leveling jack leg without lowering and raising the others can damage trailer.

a. **Lowering.**

CAUTION

Trailer must be uncoupled from towing vehicle before using leveling Jacks to level trailer. Failure to follow this caution may result in damage to leveling jacks.

(1) Pull swivel pin assembly (1) and allow leveling jack leg (5) to slowly swing down until swivel pin assembly “clicks” into locked position.

(2) Remove handcrank (2) from handcrank latch (3) and place on gearshaft (6).

(3) Rotate handcrank (2) clockwise to lower leveling jack leg (5).

(4) Continue lowering leveling jack leg (5) until trailer is level or desired effect is achieved.

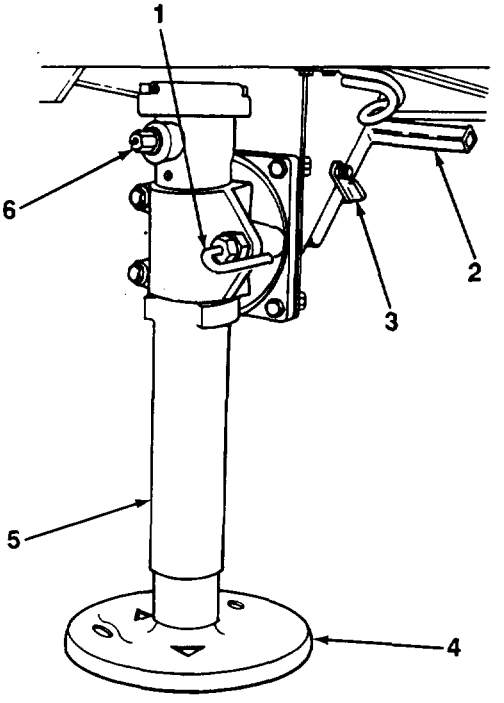

b. **Raising.**

(1) Rotate handcrank (2) counterclockwise to raise shoe (4) completely off ground.

(2) Remove handcrank (2) from gearshaft (6) and stow in handcrank latch (3).

(3) Release swivel pin assembly (1) and swing leveling jack leg (5) into travel position until swivel pin assembly “clicks” into locked position.

TA700916

2-14. OPERATING SPARE TIRE CARRIER.

a. Removing Spare Tire.

(1) Remove two wheel chocks (5) from holders (6) and chock tires (4).

(2) Remove handcrank (8) from handcrank latch (3) and place on shaft (9).

(3) Turn handcrank (8) clockwise until locking pawl (1) can be pulled free of ratchet gear (2).

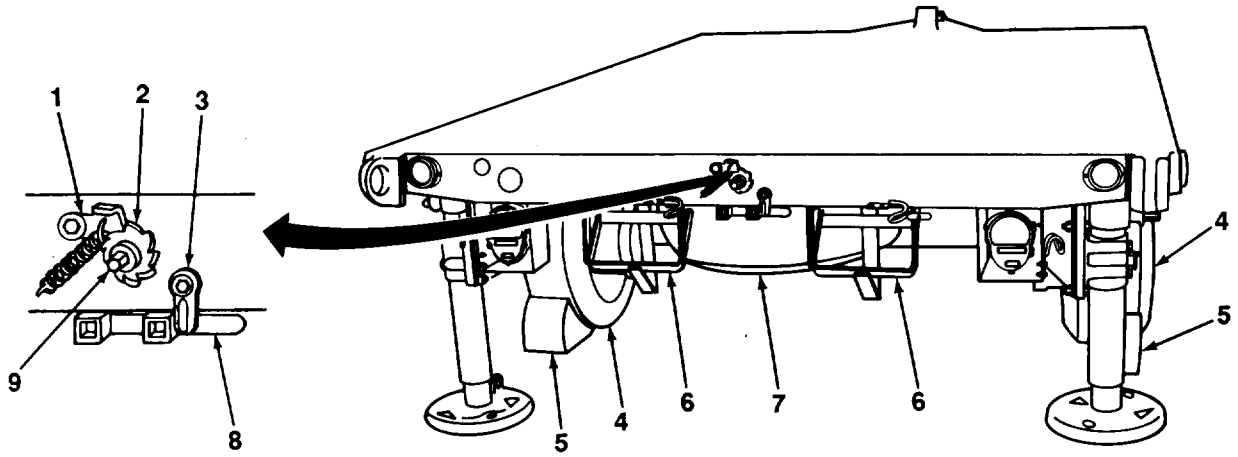

(4) Hold locking pawl (1) up and slowly turn handcrank (8) counterclockwise to lower spare tire (7) to the ground. Continue turning handcrank to allow slack to develop in cable (10).

(5) Push mounting bracket (11) downward and turn it sideways. Pull mounting bracket out through rim and release spare tire (7).

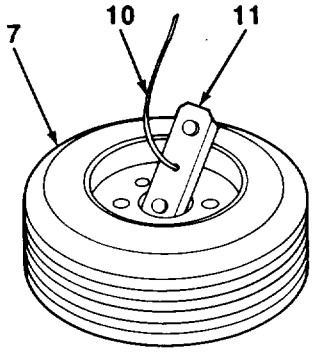

b. **Stowing Spare Tire.**

(1) Position mounting bracket (11) on bottom side of rim of spare tire (7).

(2) Turn handcrank (8) clockwise to raise spare tire (7). As spare tire is raised, aline it so that it will fit firmly and evenly in the angles. Spare tire must be pulled tightly against the angles and locking pawl (1) must rest firmly in a ratchet gear (2) tooth.

(3) Return handcrank (8) to handcrank latch (3).

(4) Return two wheel chocks (5) to holders (6).

TA700917

2-15. PREPARATION FOR LIFTING.

a. Connect sling hooks to four lifting eyes (1) at corners of trailer bed. Ensure that all sling hook points are toward outside of trailer.

WARNING

Do not stand under trailer while slinging operations are underway. Failure to follow this warning may cause serious Injury or death to personnel.

b. Lift trailer when all four sling hooks are attached to the lifting eyes (1).

c. After moving the trailer, remove sling hooks from lifting eyes (1).

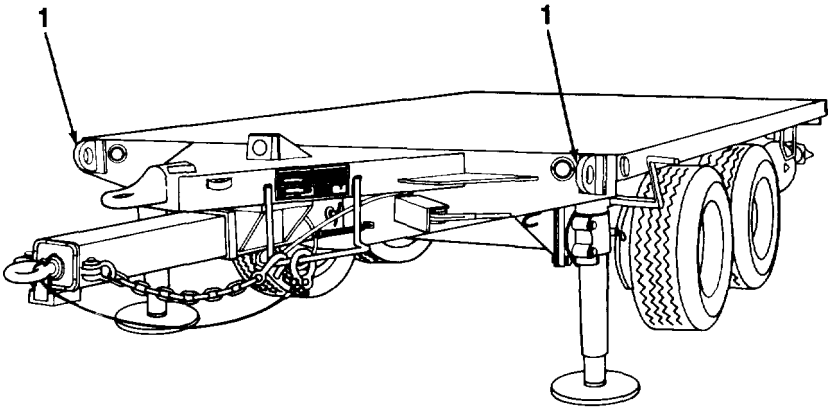

TA700918

Section IV. OPERATION UNDER UNUSUAL CONDITIONS

Paragraph Title	Page Number
Fording	2-20
General	2-19
Operation in Dusty or SandyAreas	2-20
Operation in Extreme Cold	2-19
Operation in Extreme Heat and High Humidity	2-19
Operation in Mud and Snow....	2-19
Operation in Saltwater Areas...	2-20

2-16. GENERAL.

This section contains instructions for safely operating the trailers under unusual conditions. In addition to normal preventive maintenance, special care must be taken to keep the trailers operational in extreme temperatures and humidity.

2-17. OPERATION IN EXTREME COLD.

a. Refer to Chapter 3, Section I for proper lubricants to use in extreme cold.

b. Extreme cold can cause insulation material on electrical wire to crack and cause short circuits. Other materials may become hard, brittle, and easily damaged or broken.

c. Ensure that tires are properly inflated (para 1-10). Tires may freeze to the ground or have flat spots if underinflated.

d. Brakeshoes may freeze to brakedrum and will require preheating to prevent damage (FM9-207).

e. When parking short term,park in a sheltered area out of the wind. When parking long term,place a footing of planks or brush under the wheels and leveling jacks.

f. Remove all built-up snow or ice as soon as possible after operation.

2-18. OPERATION IN EXTREME HEAT AND HIGH HUMIDITY

a. Refer to Chapter 3, Section I for proper lubricants to use in extreme heat and high humidity.

b. Do not park the trailers in sunlight for long periods of time. Heat and sunlight shorten tire life. If available, use canvas covers to shield trailer.

c. Frequently inspect, clean, and lubricate inactive equipment to prevent rust and fungus accumulation. Inspect tarpaulins for fungus, rot, and damage.

2-19. OPERATION IN MUD AND SNOW.

a. Refer to FM 21-305 for special instructions on operating in snow.

CAUTION

Under no circumstances will the trailer be towed, pulled, or pushed from the rear as damage to the trailer or equipment may result.

b. If one or more tires sink into mud or snow, it may be necessary to raise the mired tire and insert planking or matting beneath it.

c. Clean off all mud or snow as soon as possible after operation.

2-20. OPERATION IN DUSTY OR SANDY AREAS.

CAUTION

Under no circumstances will the trailer be towed, pulled, or pushed from the rear as damage to the trailer or equipment may result.

a. Clean, inspect, and lubricate more often in dusty or sandy areas (Chapter 3, Section I). Wheel bearings should be cleaned and packed by Organizational Maintenance in accordance with Chapter 3, Section I.

b. Reduce tire pressure for emergency use on beach or desert sand. Return tire pressure to normal after emergency operation (para 1-10).

2-21. OPERATION IN SALTWATER AREAS.

Saltwater will cause metal parts to rust and corrode. Clean, inspect, and lubricate frequently when operating in saltwater areas (Chapter 3, Section I).

2-22. FORDING.

a. Refer to towing vehicle operating instructions for information on fording. Towing vehicle instructions are applicable to the trailer.

b. Maximum fording depth of trailer is 30 in. (76.2 cm) of water.

c. Immediately after trailer is towed from water or if tactical situation permits, notify Organizational Maintenance to remove wheel, hub, and brakedrum and thoroughly clean brake components with cleaning compound (Item 3, Appendix E). Dry all working components of handbrakes and wheel bearings. Lubricate trailer (Chapter 3, Section I).

CHAPTER 3
OPERATOR MAINTENANCE

Section I. LUBRICATION INSTRUCTIONS

Paragraph Title	Page Number
General	3-1
Lubrication Chart	3-3
Specific Lubrication Instructions..	3-1

3-1. GENERAL.

NOTE

These instructions are MANDATORY

a. The trailers must receive lubrication with approved lubricants at recommended intervals in order to be mission-ready at all times.

b. The KEY lists lubricants to be used in all temperature ranges and shows the intervals.

c. The Lubrication Chart shows lubrication points, names items to relubricated, the required lubricant, and the recommended interval for lubrication. Any special lubricating instructions required for specific components are contained in the NOTES section of the chart.

d. Recommended intervals are based on normal conditions of operation, temperature, and humidity.when operating under extreme conditions, lubricants should be changed more frequently. When in doubt, notify your supervisor.

e. Keep all lubricants in closed containers and store in a clean, dry place away from heat. Keep container covers clean and allow no dust, dirt, or other foreign material to mix with the lubricants. Keep all lubrication equipment clean and ready for use.

3-2. SPECIFIC LUBRICATION INSTRUCTIONS.

a. Maintain a record of lubrication performed and report any problems noted during lubrication. Refer to DA Pam 738-750 for applicable forms and procedures.

WARNING

Dry cleaning solvent, P-D-680, is toxic and flammable. Always wear protective goggles and gloves, and use only in a well-ventilated area. Avoid contact with skin, eyes, and clothes, and DO NOT breathe vapors. DO NOT use near open flame or excessive heat. The solvent's flash point is 100°F-138°F (38°C-59°C). If you become dizzy while using cleaning solvent, immediately get fresh air and medical help. If solvent contacts eyes, Immediately wash your eyes and get medical aid.

b. Use dry cleaning solvent (item 14, Appendix E) to clean grease fittings, lubrication points, and surrounding areas before lubricating.

c. When lubricating at a grease fitting, apply enough grease to purge old grease from the lubricated area. When old grease oozes from the grease fitting, purging and lubrication are adequate.

3-2. SPECIFIC LUBRICATION INSTRUCTIONS (Con't).

WARNING

Wipe excess lubricant from the area of brakeshoe linings to avoid grease soaking the linings. If brakeshoe linings become soaked, have Organizational Maintenance replace them. Failure to follow this warning may cause brakes to malfunction, resulting in serious injury or death to personnel.

d. After lubrication, wipe off excess oil or grease to prevent accumulation of foreign matter.

e. Refer to FM 9-207 for lubrication instructions in cold weather.

f. After operation in muddy, sandy, or dusty conditions, clean and inspect all lubrication points for fouled lubricants. Change lubricants as required.

LUBRICATION CHART

CHASSIS, TRAILER: 5-TON, 4-WHEEL, GEMSS
XM979 (NSN 2330-01-170-6747)

TRAILER, FLATBED: 5-TON, 4-WHEEL
XM1061 (NSN 2330-01-207-3532)
M1061A1 (NSN 2330-01-207-3533)

TRAILER, GENERAL PURPOSE, FLATBED: 7-1/2-TON
XM1073 (NSN 2330-01-287-9111)

Intervals (on-condition or hard time) and related man-hour times are based on normal operation. The man-hour time specified is the time you need to do all services prescribed for a particular interval. Decrease the intervals if your lubricants are contaminated, or if you are operating equipment under adverse conditions, including longer-than-usual operating hours. The intervals may be extended during periods of low activity. If extended, adequate preservation precautions must be taken.

Dotted leader lines indicate lubrication is required on both sides of the equipment.

WARNING

Dry cleaning solvent, P-D-680, is toxic and flammable. Always wear protective goggles and gloves, and use only In a well-ventilated area. Avoid contact with skin, eyes, and clothes, and DO NOT breathe vapors. DO NOT use **near open flame or excessive heat. The solvent's flash point is 100°F-138°F (38°C-59°C). If you become dizzy while using cleaning solvent, immediately get fresh air and medical help. If solvent contacts eyes, immediately wash your eyes and get medical aid.**

Clean all fittings and area around lubrication points with dry cleaning solvent (Item 14, Appendix E) or equivalent before lubricating equipment. After lubrication, wipe off excess oil or grease to prevent accumulation of foreign matter.

The lowest level of maintenance authorized to lubricate a point is indicated in parentheses by use of the following: (C) Operator/Crew or (O) Organizational Maintenance.

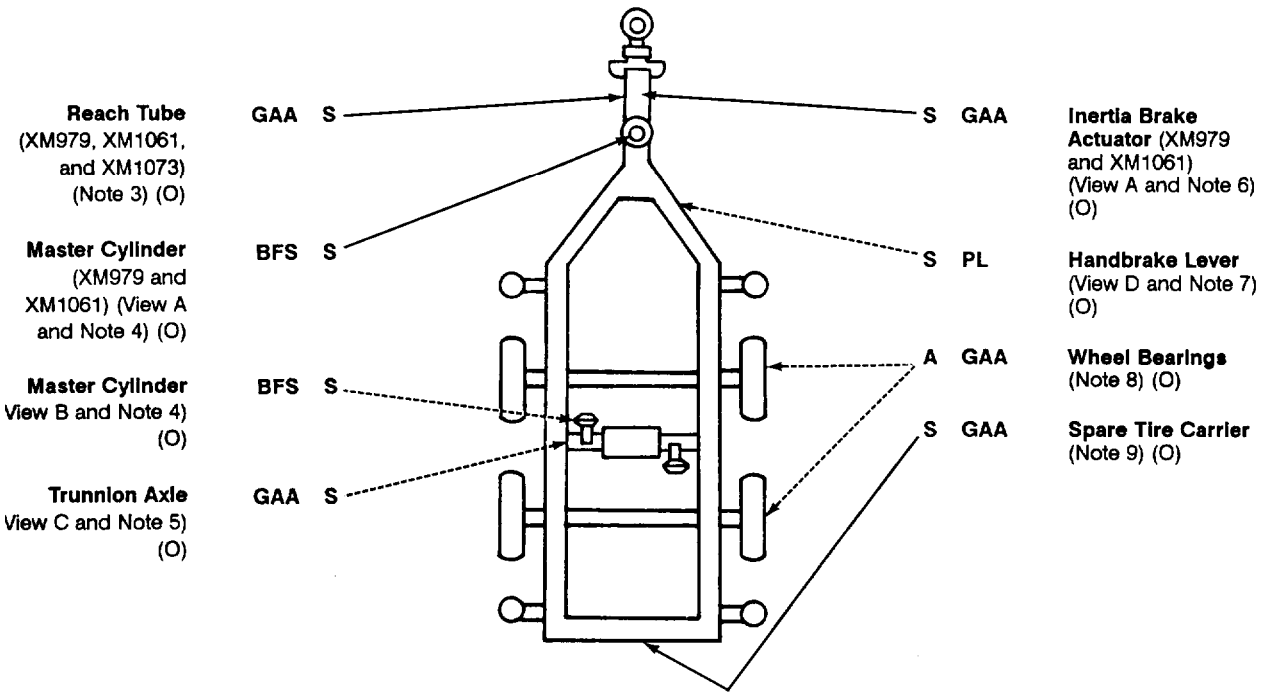

TOTAL MAN-HOURS*	
INTERVAL	MAN-HOUR
S	1.1
A	5.1

* The man-hour time specified is the time you need to do all services prescribed for a particular interval.

– KEY –

LUBRICANTS	EXPECTED TEMPERATURES			FOR ARCTIC OPERATION REFER TO FM 9-207	INTERVALS
	ABOVE +32°F (ABOVE 0°C)	+40°F to -10°F (+4°C to -23°C)	0°F to -65°F (-18°C to -54°C)		
PL-M (MIL-L-3150) Lubricating Oil, General Purpose	PL-M	–	–		S – Semiannual A – Annual
PL-S (V-VL-800) Lubricating Oil, General Purpose	–	PL-S	PL-S		
BFS (MIL-B-46176) Brake Fluid, Silicone, Automotive	All Temperatures				
GAA (MIL-G-10924) Grease, Automotive and Artillery	All Temperatures				

(A) INERTIA BRAKE ACTUATOR AND MASTER CYLINDER

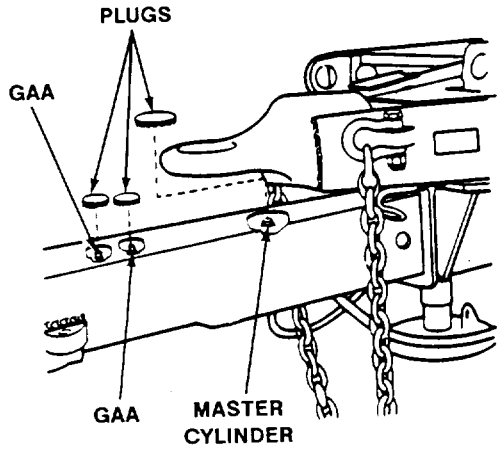

(B) MASTER CYLINDER – AIR/HYDRAULIC BRAKE SYSTEM

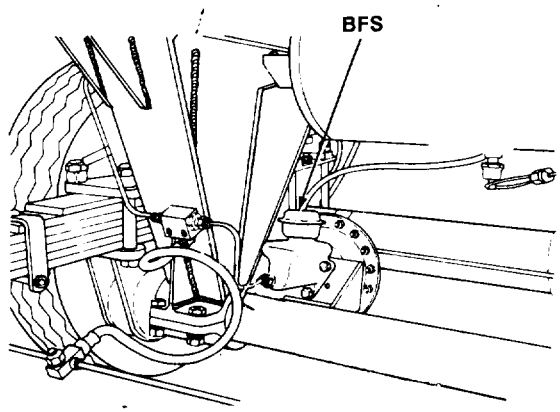

TA700920

Ⓒ **TRUNNION AXLE**

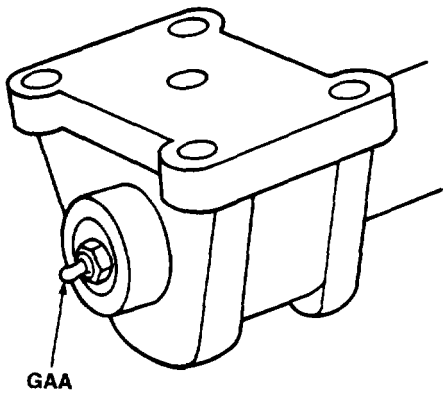

Ⓓ **HANDBRAKE LEVER**

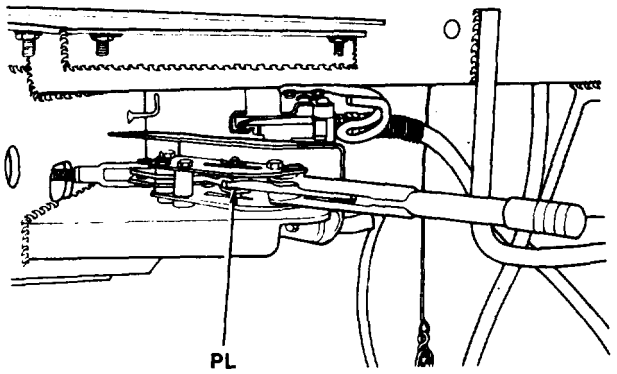

NOTES:

1. OIL CAN POINTS, Semiannually, or as required, lubricate handbrakes, latches, lever assemblies, and linkage with appropriate PL.

2. DO NOT lubricate springs and leveling jacks.

3. REACH TUBE (XM979, XM1061, AND XM1073). Fully extend reach tube and apply heavy coat of GAA.

4. **MASTER CYLINDERS.**

CAUTION

Do not overfill master cylinders.

a. *Inertia Brake System.* Remove reach tube plug and master cylinder filler plug and fill to within ½ in. (13 mm) from top with BFS.

b. Air/Hydraulic Brake System. Remove master cylinder filler cap and fill to within ½ in. (13 mm) from top with BFS.

5. TRUNNION AXLE. Lubricate two fittings with GAA.

6. INERTIA BRAKE ACTUATOR (XM979 AND XM1061), Remove two plugs. Lubricate two fittings with GAA.

7. HANDBRAKE LEVER. Lubricate handbrake lever and linkage with appropriate PL.

8. WHEEL BEARINGS. Annually, remove, clean, and pack with GAA (TM 9-214).

9. SPARE TIRE CARRIER. Apply coat of GAA to shaft.

TA700921

Section II. OPERATOR/CREW TROUBLESHOOTING PROCEDURES

Paragraph Title	Page Number
Explanation of Columns	3-7
General	3-7
Operator/Crew Troubleshooting,Table 3-1	3-8
Troubleshooting Symptom Index	3-8

3-3. GENERAL.

a. This section provides information for identifying and correcting malfunctions that may develop while operating your trailer.

b. The Troubleshooting Symptom Index lists common malfunctions that may occur and refers you to the proper page in Table 3-1 for a troubleshooting procedure.

c. If you are unsure of the location of an item mentioned in the troubleshooting procedure, refer to paragraph 1-7 or the maintenance task where the item is replaced.

d. Before performing a troubleshooting procedure, read and follow all safety instructions found in the Warning Summary at the front of this manual.

e. This section cannot list all malfunctions that may occur, nor all tests or inspections and corrective actions. If a malfunction is not listed or is not corrected by listed corrective actions, notify your supervisor.

f. When troubleshooting a malfunction:

(1) Locate the symptom or symptoms in paragraph 3-5 that best describe the malfunction.

(2) Turn to the page in Table 3-1 where the troubleshooting procedures for the malfunction in question are described. Headings at the top of each page show how each troubleshooting procedure is organized: MALFUNCTION, TEST OR INSPECTION (in step number order), and CORRECTIVE ACTION.

(3) Perform each step in the order listed until the malfunction is corrected. DO NOT perform any maintenance task unless the troubleshooting procedure tells you to do so.

3-4. EXPLANATION OF COLUMNS.

The columns in Table 3-1 are defined as follows:

(1) MALFUNCTION. A visual or operational indication that something is wrong with the trailer.

(2) TEST OR INSPECTION. A procedure to isolate the problem in a component or system.

(3) CORRECTIVE ACTION. A procedure to correct the problem.

3-5. TROUBLESHOOTING SYMPTOM INDEX.

	Troubleshooting Procedure Page
BRAKES	
Brakes:	
Drag	3-10
Grab	3-10
Will Not Release (Overheat)	3-9
No Brakes or Weak Brakes	3-10
ELECTRICAL SYSTEM	
All Lamps Fail to night	3-8
Dim or Flickering Lamps	3-9
One or More (But Not All) Lamps Fail to Ligh t	3-9
SUSPENSION	
Frame Hits Spring or Rests on Spring Bumper	3-11
Trailer Does Not Track	3-11
WHEEL AND TIRES	
Excessively Worn, Scuffed, or Cupped Tires	3-10

Table 3-1.Operator/Crew Troubleshooting.

MALFUNCTION	TEST OR INSPECTION	CORRECTIVE ACTION

ELECTRICAL SYSTEM

1. ALL LAMPS FAIL TO LIGHT.

Step 1. Check light panel switch positions on towing vehicle.

Set light panel switches on towing vehicle to correct position.

Step *2.* Ensure that intervehicular cable assembly is properly connected to towing vehicle receptacle (para 2-10). Ensure that intervehicular cable assembly connectors are properly connected to wiring harness connectors.

Connect intervehicular cable assembly properly.

Step *3.* Check intervehicular cable assembly and wiring harness connectors for dirty or corroded contacts. Check for damaged contacts.

If contacts are dirty or corroded, clean (para 3-7).

If contacts are damaged, notify Organizational Maintenance.

Table 3-1. Operator/Crew Troubleshooting (Con't).

MALFUNCTION TEST OR INSPECTION CORRECTIVE ACTION

2. ONE OR MORE (BUT NOT ALL) LAMPS FAIL TO LIGHT

Step 1. Check composite light for damage.

Notify Organizational Maintenance.

Step 2. Check for broken lead wires or loose connectors.

If connectors are loose, tighten.

If lead wires are broken, notify Organizational Maintenance.

3. DIM OR FLICKERING LAMPS.

Step 1. Check for proper connection of intervehicular cable assembly and wiring harness throughout trailer.

If intervehicular cable assembly and wiring harness are not properly connected, connect.

Step 2. Check wiring harness connectors for loose, dirty, or corroded contacts and terminals.

If connectors are loose, tighten.

If connector contacts and terminals are dirty or corroded, clean (para 3-7).

BRAKES

4. BRAKES WILL NOT RELEASE (OVERHEAT).

Step 1. Check shut-off valves on towing vehicle.

Open shut-off valves on towing vehicle.

Step 2. Ensure that handbrake levers are fully released.

Release handbrake levers.

Step 3. Check if the inertia brake actuator emergency brake cable is released (XM979 and XM1061) (para 2-10).

Pull emergency brake release cable to release brakes.

Step 4. If inertia brake actuator is being used, check if air reservoir is fully drained of air pressure (XM979 and XM1061).

Drain air reservoir pressure completely (para 3-9).

Step 5. Check if air hoses are properly connected (para 2-10).

Connect air hoses properly.

Table 3-1. Operator/Crew Troubleshooting (Con't).

MALFUNCTION TEST OR INSPECTION CORRECTIVE ACTION
Step 6. Check for dirty or leaking air couplings.
Clean air couplings (para 3-8).
Step 7. Inspect air hoses and connections for leaks.
Notify Organizational Maintenance.
5. BRAKES DRAG.
Step 1. Ensure that handbrake levers are fully released.
Release handbrake levers.
Step 2. Check inertia brake actuator emergency brake cable released (XM979 and XM1061).
Pull emergency brake release cable to release brakes.
6. BRAKES GRAB.
Check for moisture in air reservoir (para 3-9).
Drain air reservoir pressure completely (para 3-9).
If air reservoir is dry, notify Organizational Maintenance.
7. NO BRAKES OR WEAK BRAKES.
NOTE **Proceed only if air/hydraulic brakes are being used. If Inertia brake system is malfunctioning, notify Organizational Maintenance.**
Step 1. Check if air hoses are properly connected (para 2-10).
Connect air hoses properly.
Step 2. Check shut-off valves on towing vehicle.
Open shut-off valves on towing vehicle.
Step 3. Check for low air pressure on air pressure gage of towing vehicle.
If air pressure gage indicates low pressure, check all air hoses and lines for leaks.
Notify Organizational Maintenance.
Step 4. Check for improperly adjusted handbrake lever.
Adjust handbrake lever (para 3-10).
WHEELS AND TIRES
8. EXCESSIVELY WORN, SCUFFED, OR CUPPED TIRES.
Step 1. Check for proper tire pressure when tires are cool.
Inflate tires (para 1-10).

Table 3-1. Operator/Crew Troubleshooting (Con't).

MALFUNCTION TEST OR INSPECTION CORRECTIVE ACTION
Step 2. Check for loose wheel nuts and cracked or broken wheels. Notify Organizational Maintenance.
Step 3. Check suspension system for damaged springs, loose or missing mounting hardware, or misalinement. Notify Organizational Maintenance.
SUSPENSION
9. TRAILER DOES NOT TRACK.
Step 1. Check suspension system for damaged springs, loose or missing mounting hardware, or misalinement. Notify Organizational Maintenance.
Step 2. Check trailer for overloading or uneven load distribution. If trailer is overloaded, reduce weight. Refer to paragraph 1-10 for maximum payloads. If load is unevenly distributed, spread load evenly.
10. FRAME HITS SPRING OR RESTS ON SPRING BUMPER.
Check trailer for overloading. If trailer is overloaded, reduce weight. Refer to paragraph 1-10 for maximum payloads.

Section III. OPERATOR MAINTENANCE PROCEDURES

Paragraph Title	Page Number
Cleaning Air Coupling	3-13
Cleaning Electrical Connector	3-12
General	3-12
Handbrake Lever Adjustment	3-14
Servicing Air Reservoir	3-13

3-6. GENERAL.

The following paragraphs contain those maintenance procedures to be performed by the operator/crew. If a problem with the equipment is discovered that cannot be corrected, notify your supervisor.

3-7. CLEANING ELECTRICAL CONNECTOR.

a. Use a cleaning cloth (Item 4, Appendix E) to remove any buildup of grease, dirt, etc.

WARNING

Dry cleanlng solvent, P-D-680, is toxic and flammable. Always wear protective goggles and gloves, and use only in a well-ventilated area. Avoid contact with skin, eyes, and clothes, and DO NOT breathe vapors. DO NOT use near open flame or excessive heat. The solvent's flash point is 100°F-138°F (38°C-59°C). If you become dizzy while using cleaning solvent, immediately get fresh air and medical help. If solvent contacts eyes, immediately wash your eyes and get medical aid.

b. Use a scrub brush (lteem 2, Appendix E) and dry cleaning solvent (Item 14, Appendix E) to thoroughly clean connector (1).

c. Allow connector (1) to dry.

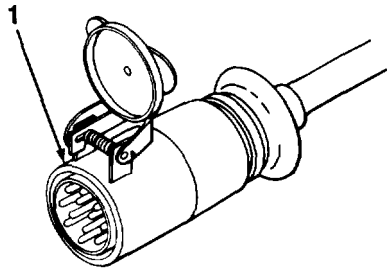

TA700922

3-8. CLEANING AIR COUPLING.

a. Use a cleaning cloth (Item 4, Appendix E) to remove any buildup of grease, dirt, etc.

b. Use detergent (Item 6, Appendix E) and water to thoroughly clean air coupling (1).

c. Allow air coupling (1) to dry.

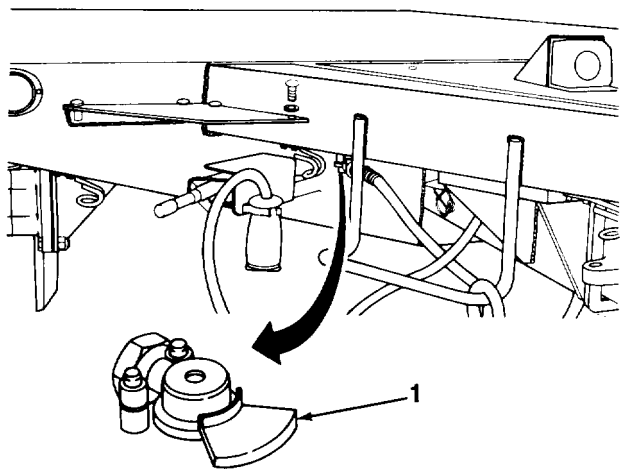

3-9. SERVICING AIR RESERVOIR.

a. Disconnect air couplings from towing vehicle (para 2-12).

NOTE

XM1073 air tank drain handle is on curbside siderall.

b. Pull air tank drain handle (1) and allow air pressure and moisture to drain completely. Release handle.

c. Connect air couplings to towing vehicle (para 2-10).

d. Pressurize brake system and check for leaks. No leaks are permissible.

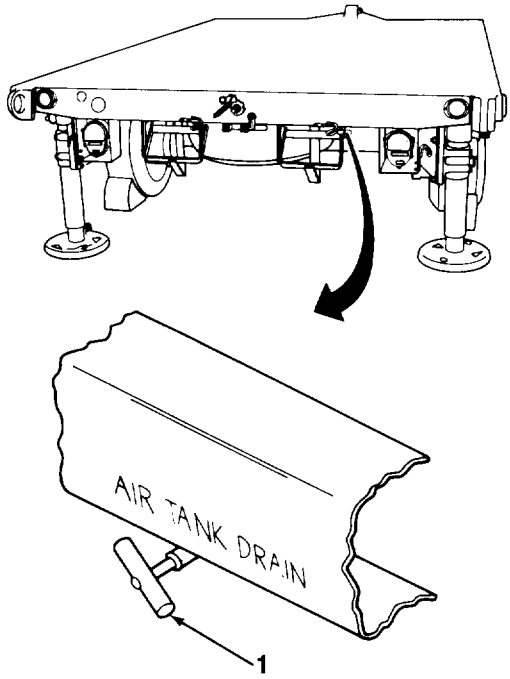

3-10. HAND BRAKE LEVER ADJUSTMENT.

WARNING

If trailer is not coupled to towing vehicle, ensure that wheels are securely chocked. Failure to do so may cause trailer to roll, resulting in serious injury or death to personnel or damage to equipment.

NOTE

Handbrake lever is properly adjusted when additional force is required to move handbrake lever beyond two-thirds distance of travel toward the applied position.

a. Release handbrake lever (1) by moving lever rearward.

b. Turn adjustment knob (2) clockwise to tighten or counterclockwise to loosen.

c. Check adjustment. Repeat steps a and b as required.

d. Repeat steps a through c to adjust other handbrake lever (1).

e. Apply handbrake lever (1) by moving lever forward.

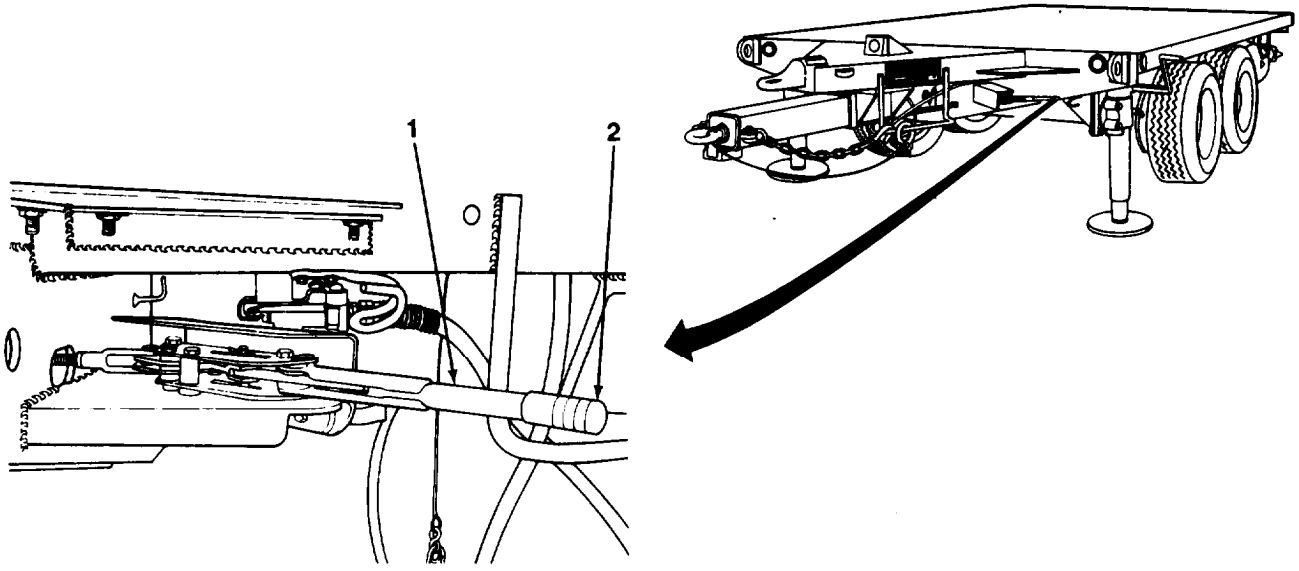

TA700924

CHAPTER 4
ORGANIZATIONAL MAINTENANCE

Section 1. REPAIR PARTS; SPECIAL TOOLS; TEST, MEASUREMENT, AND DIAGNOSTIC EQUIPMENT (TMDE); AND SUPPORT EQUIPMENT

Paragraph Title	Page Number
Common Tools and Equipment	4-1
Repair Paris	4-1
Special Tools; Test, Measurement, and Diagnostic Equipment (TMDE); and Support Equipment	4-1

4-1. COMMON TOOLS AND EQUIPMENT.

For authorized common tools and equipment, refer to the *Modified Tab/e of Organization and Equipment (MTOE)* applicable to your unit.

4-2. SPECIAL TOOLS; TEST, MEASUREMENT AND DIAGNOSTIC EQUIPMENT (TMDE); AND SUPPORT EQUIPMENT.

No special tools, TMDE, or support equipment are required to maintain the trailers.

4-3. REPAIR PARTS.

Repair parts are listed and illustrated in Appendix F of this manual.

Section II. SERVICE UPON RECEIPT

Paragraph Title	Page Number
General	4-2
Inspection Instructions	4-2
Servicing Instructions	4-2

4-4. GENERAL.

When an XM979, XM1061, M1061A1, or XM1073 trailer is received by the using unit, determine whether it has been properly prepared for service and is in condition to perform its mission. Follow the instructions in paragraphs 4-5 and 4-6.

4-5. INSPECTION INSTRUCTIONS.

a. Read and follow all instructions on DD Form 1397.

b. Remove any metal strapping, plywood, tapes, seals, wrapping, or any other shipping material.

WARNING

Dry cleaning solvent, P-D-680, is toxic and flammable. Always wear protective goggles and gloves, and use only in a well-ventilated area. Avoid contact with skin, eyes, and clothes, and DO NOT breathe vapors. DO NOT use near open flame or excessive heat. The solvent's flash point is 100°F-138°F (38°C-59°C). if you become dizzy while using cleaning solvent, immediately get fresh air and medical help. If solvent contacts eyes, immediately wash your eyes and get medical aid.

c. If any exterior parts are coated with rust preventive compound, remove with dry cleaning solvent (item 14, Appendix E).

d. Inspect equipment for damage incurred during shipping.

e. Check equipment against packing slip to see if shipment is complete. Report all discrepancies in accordance with instructions in DA Pam 738-750.

4-6. SERVICING INSTRUCTIONS.

a. Perform all operator/crew and organizational PMCS. Schedule the next PMCS on DD Form 314.

b. Perform all lubrication regardless of interval (Chapter 3, Section I).

c. If any system of the trailer does not operate properly, refer to troubleshooting instructions in Chapter 3, Section II or Section IV of this chapter.

d. Report ail problems on DA Form 2404.

e. Perform a break-in road test of 25 mi (40 km) at a maximum speed of 50 mi/h (80 km/h).

Section III. ORGANIZATIONAL PREVENTIVE MAINTENANCE CHECKS AND SERVICES (PMCS)

Paragraph Title	Page Number
General	4-3
General PMCS Procedures	4-3
Organizational Preventive Maintenance Checks and Services (PMCS), Table 4-1	4-5
Reporting Repairs	4-3
Service Intervals	4-3
Specific PMCS Procedures	4-4

4-7. GENERAL.

a. Preventive maintenance is detecting/correcting problems before they happen or fixing minor problems before they become major problems.

b. Table 4-1 contains a list of preventive maintenance checks and services to be performed by Organizational Maintenance. Attention to these checks and services will increase the useful life of the equipment.

c. Every possible problem cannot be covered in the PMCS. Be alert for anything that might cause a problem. If anything looks wrong and you can't fix it, write it on a DA Form 2404 and report it to your supervisor. Be sure to record any corrective action taken. If you find something seriously wrong, report it to your supervisor immediately.

4-8. SERVICE INTERVALS.

Perform PMCS, Table 4-1, at the following intervals:

(1) Perform Semiannual (S) PMCSoncee very six months.

(2) Perform, *Annual* (A) PMCS once each year.

4-9. REPORTING REPAIRS.

Report ail defects and corrective actions on DA Form 2404. If a serious problem is found, report it to your supervisor immediately.

4-10. GENERAL PMCS PROCEDURES.

WARNING

Dry cleaning solvent, P-D-680, is toxic and flammable. Always wear protective goggles and gloves, and use only in a well-ventilated area. Avoid contact with skin, eyes, and clothes, and DO NOT breathe vapors. DO NOT use near open flame or excessive heat. The solvent's flash point is 100°F-138°F (38°C-59°C). If you become dizzy while using cleaning solvent, immediately get fresh air and medical help. If solvent contacts eyes, immediately wash your eyes and get medical aid.

a. Make cleanup a part of your preventive maintenance. Dirt, grease, oil, and debris may cover up a serious problem. Wipe off excess grease and spilled oil. Use dry cleaning solvent (Item 14, Appendix E) to clean metal surfaces. Use detergent (Item 6, Appendix E) and water to clean rubber or plastic material.

b. Watch for and correct anything that might cause a problem with the equipment. Some things you should watch for are:

(1) Bolts, Nuts, and Screws. Check for loose, missing, bent, or broken bolts, nuts, and screws. You can't try them all with a tool, but look for chipped paint, bare metal, or rust around bolt heads. If you find one you think is loose, tighten it.

4-10. GENERAL PMCS PROCEDURES (Con't).

(2) **Welds.** Look for loose or chipped paint, rust, or gaps where parts are welded together. If you find a bad weld, report it to your supervisor.

(3) **Electrical Wires and Connectors.** Look for cracked or broken insulation, bare wires, and loose or broken connectors. Tighten loose connectors and ensure that the wires are in good condition.

(4) **Hoses and Fluid Lines.** Look for wear, damage, and leaks and ensure that clamps and fittings are tight. Wet spots show leaks, of course, but a stain around a fitting or connector can mean a leak. If a leak comes from a loose fitting or connector, tighten it. If something is broken or worn out, report it to your supervisor.

c. It is important to know how fluid leakage affects the status of the trailer. Following are types/classes of leakage you must know to determine whether the trailer is mission-capable. Learn these leakage definitions. When in doubt, notify your supervisor.

Leakage Definitions for Organizational PMCS

Class I	Seepage of fluid (as indicated by wetness or discoloration) not great enough to form drops.
Class II	Leakage of fluid great enough to form drops, but not great enough to cause drops to drip from item being inspected.
Class Ill	Leakage of fluid great enough to form drops that fall from item being inspected.

CAUTION

Equipment operation is allowed with minor (Class I or II) leakage. Fluid levels in an item/system affected with such leakage must be checked more frequently than required in PMCS. Parts without fluid will stop working or may be damaged. When in doubt, notify your supervisor.

d. Report Class Ill leaks IMMEDIATELY to your supervisor.

4-11. SPECIFIC PMCS PROCEDURES.

a. Always do your PMCS in the same order so it gets to be a habit. Once you've had some practice, you'll spot anything wrong in a hurry.

b. If the trailer doesn't work properly and you can't see what is wrong, refer to Section IV of this chapter for troubleshooting instructions.

c. Before performing preventive maintenance, read all the checks required for the applicable interval and prepare all tools needed to make all checks. Have several clean rags (Item 12, Appendix E) handy. Perform ALL inspections at the applicable intervals.

d. The columns in Table 4-1 are defined as follows:

(1) **Item No.** The number in this column shall be used as a source of item numbers for the "TM ITEM NO" column on DA Form 2404 when recording results of PMCS.

(2) **Interval.** Tells you when to do a certain check or service.

(3) **Item to be Inspected.** Lists system and common names of items that are to be inspected.

(4) **Procedures.** Tells you how to do the required check or service.

Table 4-1. Organizational Preventive Maintenance Checks and Services (PMCS).

S–SEMIANNUAL **A–ANNUAL**

ITEM NO.	INTERVAL S	INTERVAL A	ITEM TO BE INSPECTED	PROCEDURES
				NOTE **Perform operator/crew PMCS prior to or in conjunction with organizational PMCS if:** **● There is a delay between the daily operation and the organizational PMCS.** **● Regular operator is not assisting/participating.**
1			WHEEL BEARINGS	
	●			a. Check wheel bearing adjustment (para 4-44).
		●		b. Disassemble, clean, inspect, and pack wheel bearings (para 4-44).
2			BRAKES	
				NOTE **Items a and b apply only to XM979 and XM1061 trailers.**
	●			a. Check inertia brake actuator for security of mounting.
	●			b. Service inertia brake actuator in accordance with Chapter 3, Section I.
	●			c. Service all master cylinders in accordance with Chapter 3, Section I.
		●		d. Check service brakes. Replace damaged or worn parts (para 4-29). Adjust service brakes (para 4-30).
3			AIRBRAKE SYSTEM	
	●			a. Couple trailer to towing vehicle (para 2-10). inspect for leaks in airbrake system by coating airlines with soapy water and looking for bubbles. No leaks are permissible.
	●			b. Service air filter element (para 4-37).

Table 4-1. Organizational Preventive Maintenance Checks and Services (PMCS) (Con't).

S-SEMIANNUAL A–ANNUAL

ITEM NO.	INTERVAL S	INTERVAL A	ITEM TO BE INSPECTED	PROCEDURES
4			WHEELS AND TIRES	
	•			a. Torque lug nuts to 340 – 350 lb-ft (454 – 474 NŽm) using sequence shown. 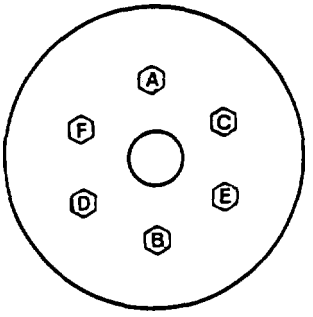
	•			b. Inspect tires for wear and damage. Check tread depth (TM 9-2610-200-14).
5			SUSPENSION	
	•			a. Check for any evidence of damage to springs, spring mounting bolts, and U-bolts. Check for loose clips or shifted leaves.
		•		b. Torque tandem axle U-bolt nuts to 85-105 lb.ft. (115-142 NŽm). Torque trunnion axle U-bolt nuts to 150-175 lb.-ft. (203-237 NŽm).
6			ELECTRICAL WIRING	
		•		Check chassis wiring harness, intervehicular cable, composite lights, clips, shields, and grommets for correct assembly and condition. Replace or repair as required (paras 4-22 through 4-26).
7			DATA PLATES	
		•		Ensure that data plates are legible and in good condition. Replace damaged data plates (para 4-57).

TA700925

Table 4-1. Organizational Preventive Maintenance Checks and Services (PMCS) (Con't).

S–SEMIANNUAL A–ANNUAL

ITEM NO.	INTERVAL		ITEM TO BE INSPECTED	PROCEDURES
	S	A		
8			ROAD TEST	**NOTE** **Be alert for any unusual noises that may indicate damage or looseness in springs.**
		●		a. Perform road test. Give special attention to items that were repaired or adjusted. Be alert for unusual or excessive noises that may indicate damage, looseness, defects, or deficient lubrication in attachments or wheels.
				WARNING **Cautiously feel each wheel hub and brakedrum. Serious burns can result from touching an overheated brakedrum.**
		●		b. After road test, cautiously feel wheel hubs and brakedrums for excess heat. An overheated wheel hub and brakedrum indicate an improperly adjusted or defective brake, or a dry wheel bearing.

Section IV. ORGANIZATIONAL TROUBLESHOOTING PROCEDURES

Paragraph Title	Page Number
Explanation of Columns	4-8
General	4-8
Organizational Troubleshooting, Table 4-2	4-9
Troubleshooting Symptom Index	4-9

4-12. GENERAL.

a. This section contains troubleshooting information and tests for locating and correcting some of the malfunctions that may develop in the trailers.

b. The Troubleshooting Symptom Index lists common malfunctions that may occur and refers you to the proper page in Table 4-2 for a troubleshooting procedure.

c. This manual cannot list all malfunctions that may occur, nor all tests or inspections and corrective actions. If a malfunction is not listed or is not corrected by listed corrective actions, notify your supervisor.

d. When troubleshooting a malfunction:

(1) Question the operator to obtain any information that might help determine the cause of the problem. Before continuing, ensure that all applicable operator/crew troubleshooting was performed.

(2) Locate the symptom or symptoms in paragraph 4-14 that best describe the malfunction. If the appropriate symptom is not listed, notify your supervisor.

(3) Turn to the page in Table 4-2 where the troubleshooting procedures for the malfunction in question are described. Headings at the top of each page show how each troubleshooting procedure is organized: MALFUNCTION, TEST OR INSPECTION (in step number order), and CORRECTIVE ACTION.

(4) Perform each step in the order listed until the malfunction is corrected. DO NOT perform any maintenance task unless the troubleshooting procedure tells you to do so.

4-13. EXPLANATION OF COLUMNS.

The columns in Table 4-2 are defined as follows:

(1) MALFUNCTION. A visual or operational indication that something is wrong with the trailer.

(2) TEST OR INSPECTION. A procedure to isolate the problem in a system or component.

(3) CORRECTIVE ACTION. A procedure to correct the problem.

4-14. TROUBLESHOOTING SYMPTOM INDEX.

	Troubleshooting Procedure Page
BRAKES	
Handbrakes:	
Drag	4-11
Will Not Hold Trailer	4-11
Brakes:	
Drag	4-13
Grab	4-13
Will Not Release (Overheat)	4-12
No Brakes	4-12
Slow Application of Brakes...	4-13
Slow Release of Brakes	4-13
Weak Brakes	4-12
ELECTRICAL SYSTEM	
All Lamps Fail to night	4-9
Dim or Flickering Lamps	4-11
One or More (But Not All) Lamps Fail to Light	4-10
SUSPENSION SYSTEM	
Improper Spring Action	4-14
Trailer Does Not Track.....	4-14
WHEELS AND TIRES	
Excessively Worn, Scuffed, or Cupped Tires	4-14

Table 4-2. Organizational Troubleshooting.

MALFUNCTION TEST OR INSPECTION CORRECTIVE ACTION

ELECTRICAL SYSTEM

NOTE

Refer to wiring diagram in paragraph 4-27 for assistance when performing electrical troubleshooting.

1. ALL LAMPS FAIL TO LIGHT.

Step 1. Check wiring for loose connections and broken wires.

Tighten loose connections. Repair or replace broken wires (para 4-23, 4-24, 4-25, or 4-26).

Table 4-2. Organizational Troubleshooting (Con't).

MALFUNCTION

TEST OR INSPECTION

CORRECTIVE ACTION

Step 2. Check wiring harness for bare spots causing short circuit.

Repair or replace wiring harness (para 4-25 or 4-26).

Step 3. Check wire 90A (ground lead) for continuity. Disconnect intervehicular cable assembly from towing vehicle. Attach multimeter red lead to pin D (1) and black lead to terminal end. If continuity is not present, attach ground lead terminal and check again.

Repair wire 90A, as required (para 4-24).

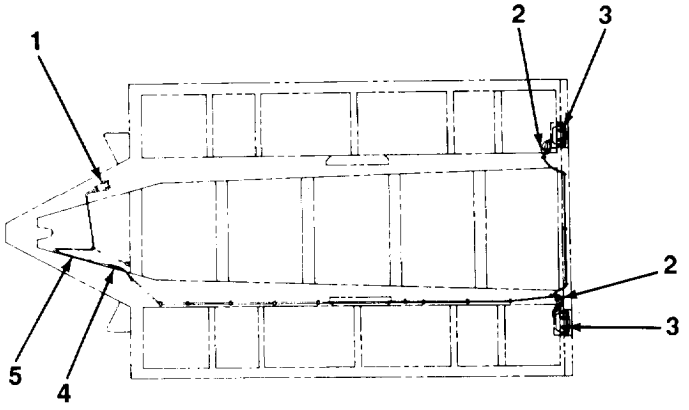

2. ONE OR MORE (BUT NOT ALL) LAMPS FAIL TO LIGHT

Step 1. Check for burned out or defective lamps.

If lamps are burned out or defective, replace (para 4-22).

Step 2. Check wiring for loose connections and broken wires.

Tighten loose connections. Repair or replace broken wires (para 4-23, 4-24, 4-25, or 4-26).

Step 3. Disconnect intervehicular cable assembly connector and check for loose, dirty, or corroded contacts and terminal assemblies.

WARNING

Dry cleaning solvent, P-D-680, is toxic and flammable. Always wear protective goggles and gloves, and use only in a well-ventilated area. Avoid contact with skin, eyes, and clothes, and DO NOT breathe vapors. DO NOT use near open flame or excessive heat. The solvent's flash point Is 10O°F-138° F (38 °C-59°C). If you become dizzy while using cleaning solvent, immediately get fresh air and medical help. If solvent contacts eyes, immediately wash your eyes and get medical aid.

If contacts and terminal assemblies are loose, tighten. If dirty or corroded, clean using abrasive paper (Item 11, Appendix E) and dry cleaning solvent (Item 14, Appendix E). Dry thoroughly.

TA700926

Table 4-2. Organizational Troubleshooting (Con't).

MALFUNCTION TEST OR INSPECTION CORRECTIVE ACTION

Step 4. Connect intervehicular cable assembly to towing vehicle (para 2-10). Check voltage as follows for each inoperative lamp until problem is isolated. Attach red multimeter lead to intervehicular cable assembly socket (4). Attach black multimeter lead to ground (5). Turn on light switch or apply brakes.

If no voltage is present, repair or replace intervehicular cable assembly (para 4-23 or 4-24).

Step 5. Attach red multimeter lead to wiring harness socket (2) and black lead to ground (5). Turn on light switch or apply brakes.

If no voltage is present, repair or replace wiring harness (para 4-25 or 4-26).

Step 6. Remove lamp (3) from socket. Attach red multimeter lead to lamp socket and black lead to ground (5). Turn on light switch or apply brakes.

If no voltage is present, repair or replace wiring harness (para 4-25 or 4-26) or composite light (para 4-22).

3. **DIM OR FLICKERING LAMPS.**

Step 1. Check for burned out or defective lamps.

If lamps are burned out or defective, replace (para 4-22).

Step 2. Check wiring for loose connections, broken wires, and short circuits.

Tighten loose connections. Repair short circuits. Repair or replace broken wires (para 4-23, 4-24, 4-25, or 4-26).

Step 3. Check wire 90A (ground lead) for continuity. Disconnect intervehicular cable assembly from towing vehicle. Attach multimeter red lead to pin D1 (1) and black lead to terminal end. If continuity is not present, attach ground lead terminal and check again.

Repair or replace intervehicular cable assembly (para 4-23 or 4-24).

BRAKES

4. HANDBRAKES WILL NOT HOLD TRAILER.

Step 1. Check handbrake adjustment (para 4-28).

Adjust handbrake (para 4-28).

Step 2. Check service brake adjustment (para 4-30).

Adjust service brakes (para 4-30).

5. HANDBRAKES DRAG.

Step 1. Check handbrake adjustment (para 4-28).

Adjust handbrake (para 4-28).

Table 4-2. Organizational Troubleshootlng (Con't).

MALFUNCTION TEST OR INSPECTION	CORRECTIVE ACTION
Step 2. Check lubrication of handbrake lever and linkage.	Lubricate handbrake lever and linkage (Chapter 3, Section l).
6. BRAKES WILL NOT RELEASE (OVERHEAT).	
Step 1. Check for missing or damaged preformed packings in air couplings.	Replace missing or damaged preformed packings (para 4-38).
Step 2. Check for restrictions in or damage to air lines.	Remove restrictions or replace damaged air lines (para 4-39).
Step 3. With trailer coupled to towing vehicle, check for air being released from relay valve when towing vehicle brakes are released.	If air is not released from relay valve, replace (para 4-40).
Step 4. Check for a weak or broken brakeshoe return spring (para 4-29).	Replace brakeshoe return spring (para 4-29).
7. NO BRAKES OR WEAK BRAKES.	
Step 1. Check level of brake fluid in master cylinder.	Service master cylinder (Chapter 3, Section l).
Step 2. Check for clogged air filter elements.	Clean or replace air filter elements (para 4-37).
Step 3. Check for leaks in hydraulic brake system.	Repair leaks (para 4-34 or 4-36).
Step 4. Check for air in hydraulic brake system.	Bleed brakes (para 4-31).
Step 5. Check for grease on brakeshoe linings (para 4-29).	Replace brakeshoes (para 4-29). Replace wheel oil seal as required (para 4-44).
Step 6. Check for worn brakeshoe linings (para 4-29).	Adjust service brakes (para 4-30) or replace brakeshoes (para 4-29), as required.
Step 7. Check for scored brakedrum.	Replace brakedrum (para 4-44).

Table 4-2. Organizational Troubleshooting (Con't).

MALFUNCTION TEST OR INSPECTION CORRECTIVE ACTION
8. SLOW APPLICATION OR SLOW RELEASE OF BRAKES.
Step 1. Check for clogged air filter elements.
Clean or replace air filter elements (para 4-37).
Step 2. With trailer coupled to towing vehicle, check for air being released from relay valve when towing vehicle brakes are released.
If air is not released from relay valve, replace (para 4-40).
Step 3. Check for air in hydraulic brake system.
Bleed brakes (para 4-31).
Step 4. Check for weak or broken brakeshoe return spring (para 4-29).
Replace brake shoe return spring (para 4-29).
9. BRAKES GRAB.
Step 1. Check service brake adjustment (para 4-30).
Adjust service brakes (para 4-30).
Step 2. Check for loose or worn wheel bearings.
Adjust or replace wheel bearings as required (para 4-44).
Step 3. Visually check for out-of-round, cracked, 'worn, scored, or deformed brakedrum.
Replace brakedrum (para 4-44).
Step 4. Check for worn or loose brakeshoe linings or grease on brakeshoe linings.
Replace brakeshoes (para 4-29).
Replace wheel oil seal as required (para 4-44).
10. BRAKES DRAG.
Step 1. Check service brake adjustment (para 4-30).
Adjust service brakes (para 4-30).
Step 2. Visually check for out-of-round brakedrum.
Replace brakedrum (para 4-44).
Step 3. Check for worn or broken brakeshoe return spring (para 4-29).
Replace brakeshoe return spring (para 4-29).

Table 4-2. Organizational Troubleshooting (Con't).

MALFUNCTION
TEST OR INSPECTION
CORRECTIVE ACTION

WHEELS AND TIRES

11. EXCESSIVELY WORN, SCUFFED, OR CUPPED TIRES.

Step 1. Check for proper torque on wheel nuts.

Torque wheel nuts to 340-350 lb-ft (454-474 NŽm) using sequence shown.

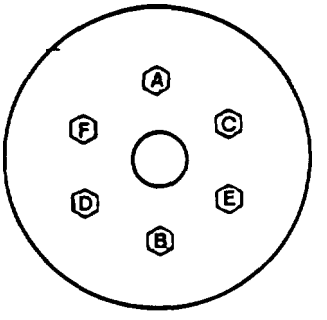

Step 2. Inspect for bent wheel.

Replace wheel (para 4-45).

Step 3. Inspect for bent or damaged trunnion or axles.

Notify Direct Support Maintenance.

Step 4. Check wheel bearing adjustment.

Adjust wheel bearings (para 4-44).

SUSPENSION SYSTEM

12. TRAILER DOES NOT TRACK.

Step 1. Check for bent wheel.

Replace wheel (para 4-45).

Step 2. Check for bent or damaged trunnion or axles.

Notify Direct Support Maintenance.

Step 3. Check wheel bearing adjustment.

Adjust wheel bearings (para 4-44).

13. IMPROPER SPRING ACTION.

Step 1. Check for loose U-bolts.

Torque tandem axle U-bolt nuts to 85-105 lb.ft. (115-142 NŽm). Torque trunnion axle U-bolt nuts to 150-175 lb.-ft. (203-237 NŽm).

Step 2. Inspect for broken spring leaves.

Notify Direct Support Maintenance.

Step 3. Inspect for broken spring center bolt or clip.

Notify Direct Support Maintenance.

TA700927

Section V. GENERAL MAINTENANCE INSTRUCTIONS

Paragraph Title	Pa e Number
Blocking	4-16
Cleaning	4-15
Disassembly and Assembly	4-16
General	4-15
Inspection	4-16
Removing Burrs, Scratches, and Raised Metal	4-17
Replacement of Parts	4-17

4-15. GENERAL.

This section contains general maintenance procedures, such as cleaning, blocking, inspection, etc. that should be performed along with specific maintenance procedures.

4-16. CLEANING.

WARNING

Drycleaning solvent, P-D-680, is toxic and flammable. Always wear protectivegoggles and gloves, and use only in swell-ventilated area. Avoid contact with skin, eyes, and clothes, and DO NOT breathe vapors. DO NOT use near open flame or excesslve heat. The solvent's flash point is 100°F-138°F(38°C-59°C). If you become dizzy while using cleaning solvent, immediately get fresh air and medical help. If solvent contacts eyes, immediately wash your eyes and get medical aid.

a. Remove all dirt, grease, and oil from outer surfaces prior to removal or disassembly. Clean metal surfaces with a cleaning cloth (Item 4, Appendix E), or a scrub brush (Item 2, Appendix E) and dry cleaning solvent (item 14, Appendix E). Use detergent (Item 6, Appendix E) and water and a cleaning cloth (Item 4, Appendix E) when cleaning rubber or plastic parts.

b. After disassembling parts, clean and allow to dry prior to assembly.

c. If lubrication is required during assembly, clean all lubrication points before lubricating. Once assembly is complete, clean any excess lubricant to avoid accumulation of foreign matter.

4-17. BLOCKING.

a. Wheel chocks should always be set before performing any maintenance. Remove wheel chocks (1) from holders (2) and position behind rearmost wheels.

b. Use blocking whenever possible to provide a secure, steady working base. When blocking is specific to a procedure, blocking instructions will be included in the procedure paragraph.

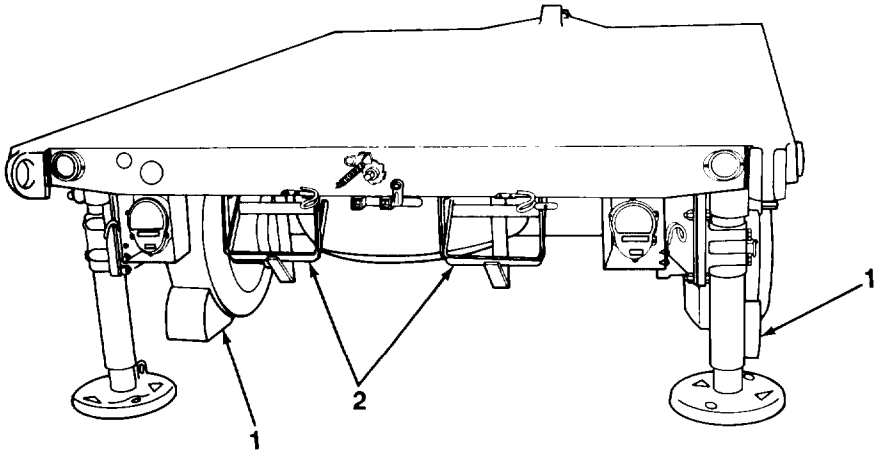

4-18. INSPECTION.

Inspect all parts before, during, and after maintenance. The following general inspection should be performed when repairing assemblies:

(1) Inspect for damaged, deteriorated, broken, or frayed parts.

(2) Inspect parts for uneven wear, out-of-roundness, scoring, and warping.

(3) Inspect all metal parts for scratches, dents, marred paint, cracks, rust, and corrosion.

(4) Inspect for loose, missing, cracked, or damaged hardware. Repair or replace as required.

(5) Inspect for damaged threads, keys, and holes

4-19. DISASSEMBLY AND ASSEMBLY.

a. Complete disassembly of a component is not always necessary to make a required repair or replacement. Good judgement should be used to keep disassembly to a minimum.

b. When disassembling a component, first follow basic inspection procedures (para 4-18), then remove as many major assemblies and subassemblies as necessary. These may then be disassembled, as required, into individual parts.

c. During disassembly, tag critical parts such as shims, bearings, and electrical harness leads to facilitate assembly. This is especially important for electrical equipment if circuit number tags are missing or illegible.

d. During assembly, assemble subassemblies first, combine into major assemblies where possible, and then install to form a complete component.

Records to provide repair and replacement data and statistics should be carefully prepared and maintained in accordance with DA Pam 738-750.

TA700928

4-20. REPLACEMENT OF PARTS,

a. Break down unserviceable and unrepairable assemblies into issue, and return serviceable parts to stock. Salvage parts or assemblies that cannot be repaired, selective-fitted, or reclaimed to the standards contained in this manual. Use new parts to replace them.

b. If screws, washers, or nuts are loose or damaged, tighten or replace.

c. Replace gaskets, packings, preformed packings, seals, lockwashers, locknuts, cotter pins, and spring pins. Replace bushings only if removed.

d. If a required part is not available, recondition the old part. inspect such parts carefully after reconditioning to determine their suitability and probable service life. Requisition replacement parts immediately.

4-21. REMOVING BURRS, SCRATCHES, AND RAISED METAL.

a. Use a fine mill file, soft stone, or crocus cloth to remove burrs, scratches, or raised metal.

b. When filing aluminum, clean file often with steel file brush to avoid lodging file with aluminum particles that will gouge work surface.

Section VI. ELECTRICAL SYSTEM MAINTENANCE

Paragraph Title	Page Number
Composite Light Maintenance	4-18
Intervehicular Cable Assembly Repair	4-22
Intervehicular Cable Assembly Replacement	4-20
Wiring Diagram	4-28
Wiring Harness Repair	4-26
Wiring Harness Replacement	4-24

4-22. COMPOSITE LIGHT MAINTENANCE.

This Task Covers:

a. Lamp Replacement
b. Removal
c. Installation

Initial Setup:

Equipment Conditions:

- Intervehicular cable assembly disconnected from towing vehicle (para 2-12).

Tools/Test Equipment:

- General mechanic's tool kit

Materials/Parts:

- Marker tags (Item 16, Appendix E)
- Two Two lockwashers

a. LAMP REPLACEMENT

1. Loosen six captive screws (1) and remove lens (5) from body (4).
2. Inspect preformed packing (2) for damage. If damaged, remove and discard.

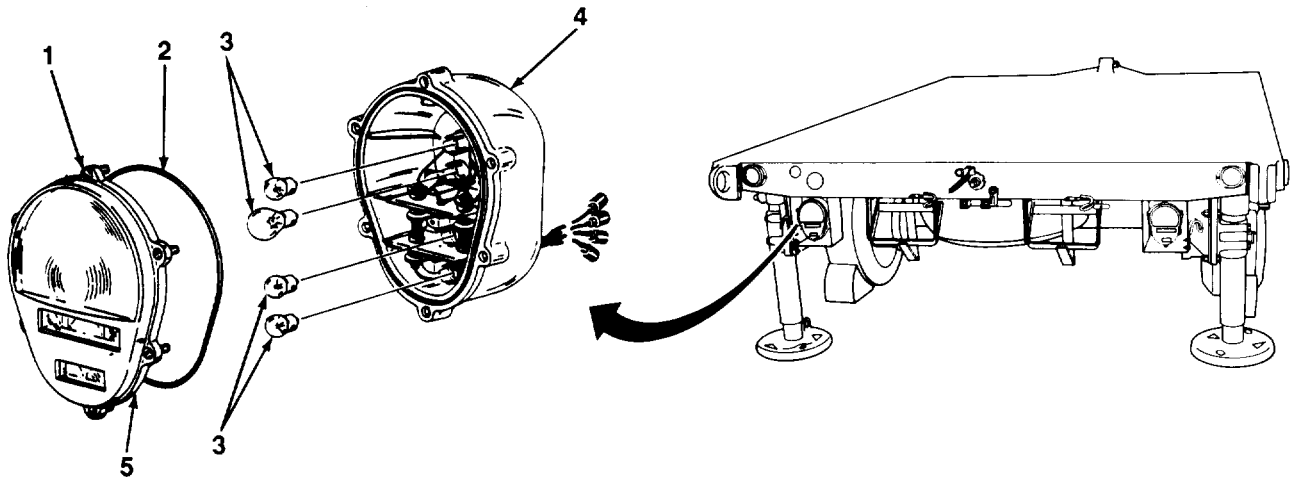

TA700929

4-22. COMPOSITE LIGHT MAINTENANCE (Con't).

3. Remove four lamps (3) by pushing lamps in and turning counterclockwise.
4. Install four lamps (3) by pushing lamps in and turning clockwise.
5. If removed, install new preformed packing (2).
6. Install lens (5) on body (4) and tighten six captive screws (1).

b. REMOVAL

NOTE

- **Tag wires for installation if marker bands are missing or illegible.**
- **Only XM1073 has a mounting bracket.**

1. Remove four composite light connectors (1o) from mounting bracket (12), if present. Disconnect composite light connectors from wiring harness connectors (11).
2. Remove two screws (9), lockwashers (8), and composite light (6) from bracket (7). Discard lockwashers.

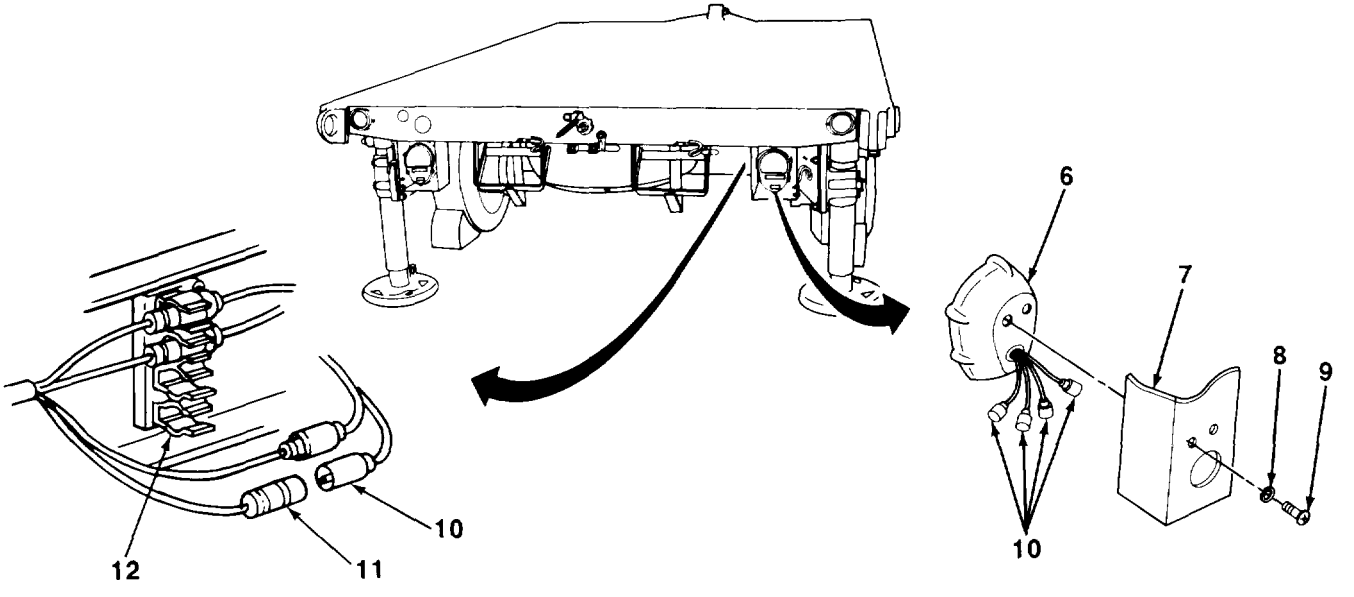

c. INSTALLATION

1. Install composite light (6) on bracket (7) with two screws (9) and new lockwashers (8).

NOTE

Only XM1073 has a mounting bracket.

2. Connect four composite light connectors (10) to wiring harness connectors (11). Install in mounting bracket (1 2), if present.

FOLLOW-ON TASKS:

- Connect intervehicular cable assembly to towing vehicle (para 2-10).
- Check operation of light.

TA700930

4-23. INTERVEHICULAR CABLE ASSEMBLY REPLACEMENT.

This Task Covers:

a. Removal

b. Installation

Initial Setup:

Equipment Conditions:

- Intervehicuiar cable assembly disconnected from towing vehicle (para 2-12).

Tools/Test Equipment:

- General mechanic's tool kit

Materiais/Parts:

- Marker tags (item 16, Appendix E)
- Three lockwashers (XM1073)
- Four lockwashers (All except XM1073)

a. REMOVAL

1. Unstow connector (15) from clip (16).
2. if clip (16) *is* damaged, remove screw (18), lockwasher (17), and clip from curbside handbrake mud guard. Discard clip and lockwasher.

NOTE

XM1073 has only one clamp.

3. Remove two screws (9), lockwashers (8), and clamps (6) from intervehicular cable assembly (7). Discard lockwashers.
4. Unhook and remove spring (14) from clamp (11) and frame.

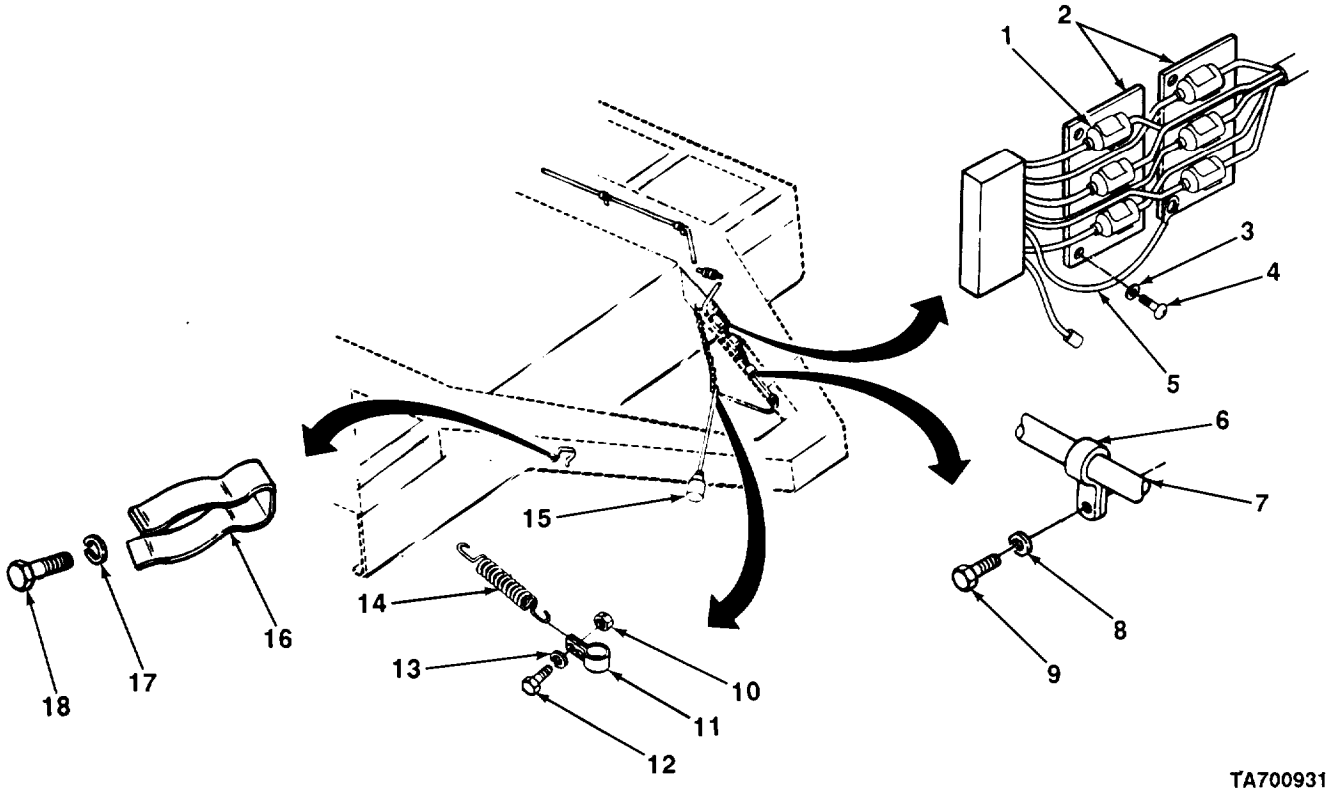

4-23. INTERVEHICULAR CABLE ASSEMBLY REPLACEMENT (Con't).

5. Remove nut (10), screw (12), lockwasher (1 3), and clamp (11) from intervehicular cable assembly (7). Discard lockwasher.

NOTE

Tag wires for installation if marker bands are missing or illegible.

6. Remove six connectors (1) from two clips (2). Disconnect connectors.

7. Remove screw (4), lockwasher (3), and ground lead (5) from clip (2). Discard lockwasher.

8. If clips (2) are damaged, remove three remaining screws (4), lockwashers (3), and two clips from frame. Discard clips and lockwashers.

9. Remove intervehicular cable assembly (7) from trailer.

b. INSTALLATION

1. Slide clamp (11) onto intervehicular cable assembly (7'). Secure clamp with screw (12), new lockwasher (13), and nut (10).

NOTE

XM1073 has only one clamp.

2. Slide two clamps (6) onto intervehicular cable assembly (7). Position intervehicular cable assembly on frame.

3. If removed, install two new clips (2) with three screws (4) and new lockwashers (3).

4. Install ground lead (5) on clip (2) with remaining screw (4) and new lockwasher (3).

5. Connect six connectors (1) and install in two clips (2).

6. Secure two clamps (6) to frame with screws (9) and new lockwashers (8).

7. Hook spring (14) to clamp (11) and frame.

8. If removed, install new clip (16) on curbside handbrake mud guard with screw (18) and new lockwasher (17).

9. Stow connector (15) in clip (16).

FOLLOW-ON TASKS:

- Connect intervehicular cable assembly to towing vehicle (para 2-10).
- Check operation of lights.

4-24. INTERVEHICULAR CABLE ASSEMBLY REPAIR.

This Task Covers:

a. Contact and Connector Plug Replacement
b. Lug Terminal Replacement
c. Terminal Assembly Replacement
d. Marker Band Replacement

Initial Setup:

Equipment Conditions:

l Intervehicular cable assembly removed (para 4-23).

Tools/Test Equipment

- General mechanic's tool kit
- Electric etcher
- Soldering iron

References:

- TB SIG 222

Materiais/Parts:

- Solder (Item 13, Appendix E)
- Marker tags (Item 16, Appendix E)
- One lug terminal
- Eight contacts
- Marker bands (as required)
- Terminal assemblies (as required)

a. CONTACT AND CONNECTOR PLUG REPLACEMENT

NOTE

For detailed instructions on resoldering and soldering, refer to TB SIG 222.

1. Loosen clamp (4) on shell (3). Slide shell back from insert (1).
2. Drive contacts (2) from insert (1).
3. Tag wires. Desolder eight contacts (2) from cable (7) and remove. Discard contacts.
4. Remove shell (3) and bushing (5) from cable (7).
5. Remove spring (6) from cable (7).

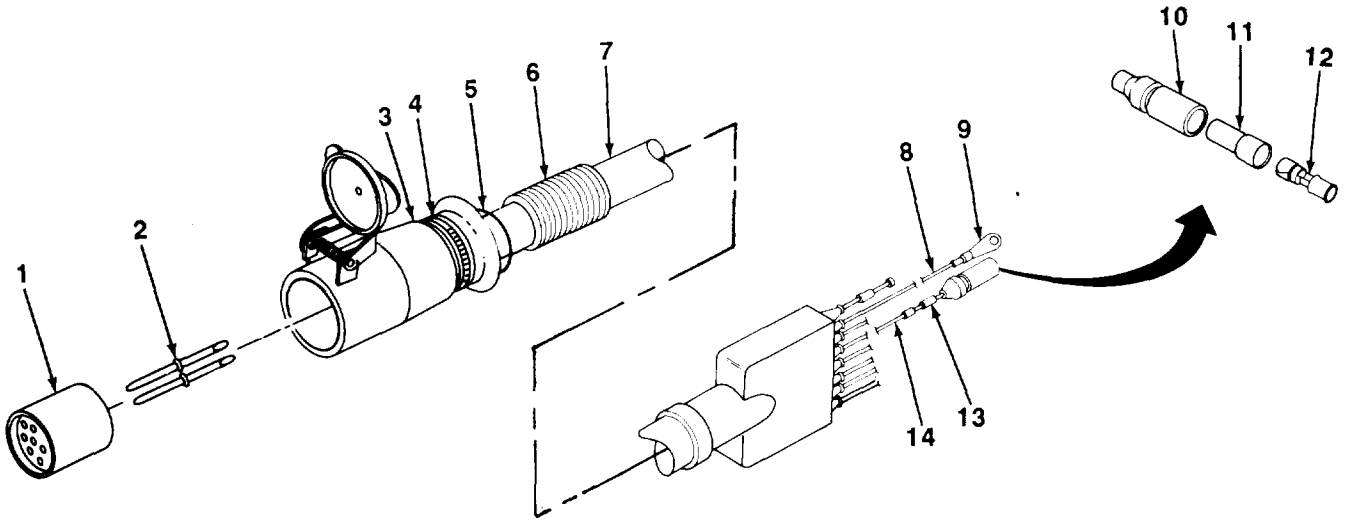

TA700932

4-24. INTERVEHICULAR CABLE ASSEMBLY REPAIR (Con't).

6. Install spring (6) on cable (7).
7. Slide bushing (5) and shell (3) onto cable (7).
8. Solder eight new contacts (2) to cable (7). Push contacts into rear of insert (1). Remove tags.
9. Slide shell (3) over insert (1).
10. Tighten clamp (4) on shell (3).

b. LUG TERMINAL REPLACEMENT

1. Cut off lug terminal (9) from ground lead (8). Discard lug terminal.
2. Strip ground lead (8) to approximate depth of new lug terminal (9).
3. Crimp new lug terminal (9) onto ground lead (8).

c. TERMINAL ASSEMBLY REPLACEMENT

1. Slide shell (10) and insulator (11) off terminal assembly (12).
2. Cut off terminal assembly (12) and discard.
3. Slide insulator (11) and shell (10) off wire (14).
4. Strip wire (14) approximately 1/8 in. (3 mm).
5. Slide shell (10) and insulator (11) over wire (14).
6. Place wire (14) in cylinder end of new terminal assembly (12) and crimp.
7. Slide insulator (11) and shell (10) over terminal assembly (12).

d. MARKER BAND REPLACEMENT

1. Open tabs and remove marker band (13) from wire (14). Discard marker band.
2. Etch circuit number on new marker band (13). Refer to wiring diagram (para 4-27).
3. Place new marker band (13) over wire (14) and bend tabs closed.

FOLLOW-ON TASKS:

- Install intervehicular cable assembly (para 4-23).

4-25. WIRING HARNESS REPLACEMENT.

This Task Covers:

a. Removal **b. Installation**

Initial Setup:

Equipment Conditions:

- Intervehicular cable assembly disconnected from towing vehicle (para 2-12).

Tools/Test Equipment:

- General mechanic's tool kit

Materials/Parts:

- Tie-down straps (Item 15, Appendix E)
- Marker tags (Item 16, Appendix E)
- Electrical tape (Item 18, Appendix E)
- One grommet (XM1073)
- Three grommets (all except XM1073)
- Eleven lockwashers (all except XM1073)
- Eleven straps (XM1073)

a. REMOVAL

1. At front of trailer, remove six wiring harness connectors (3) from two clips (2). Disconnect wiring harness connectors from intervehicular cable assembly connectors.

NOTE

XM1073 has only one grommet.

2. Remove three grommets (1) from frame and discard. Cut grommets if solid.

3. On XM1073, cut 11 straps securing wiring harness (4) to 11 loops. Discard straps.

4. On all except XM1073, remove 11 screws (10), lockwashers (11), flatwashers (13), and straps (12) from frame. Remove four remaining straps from mounting for wheel chock holders (6). Discard lockwashers.

NOTE

Only XM1073 has mounting brackets.

5. At each composite light, remove four wiring harness connectors (5) from each mounting bracket (7), if present. Disconnect from composite light connectors.

6. Remove wiring harness (4) from trailer.

7. If mounting brackets (7) are damaged, remove four screws (8), lockwashers (9), and mounting brackets. Discard lockwashers.

b. INSTALLATION

NOTE

Only XM1073 has mounting brackets.

1. If removed, install mounting bracket (7) on each side of trailer with two screws (8) and new lockwashers (9).

2. Feed wiring harness (4) through holes in crossmember along left side framerail.

4-25. WIRING HARNESS REPLACEMENT (Con't).

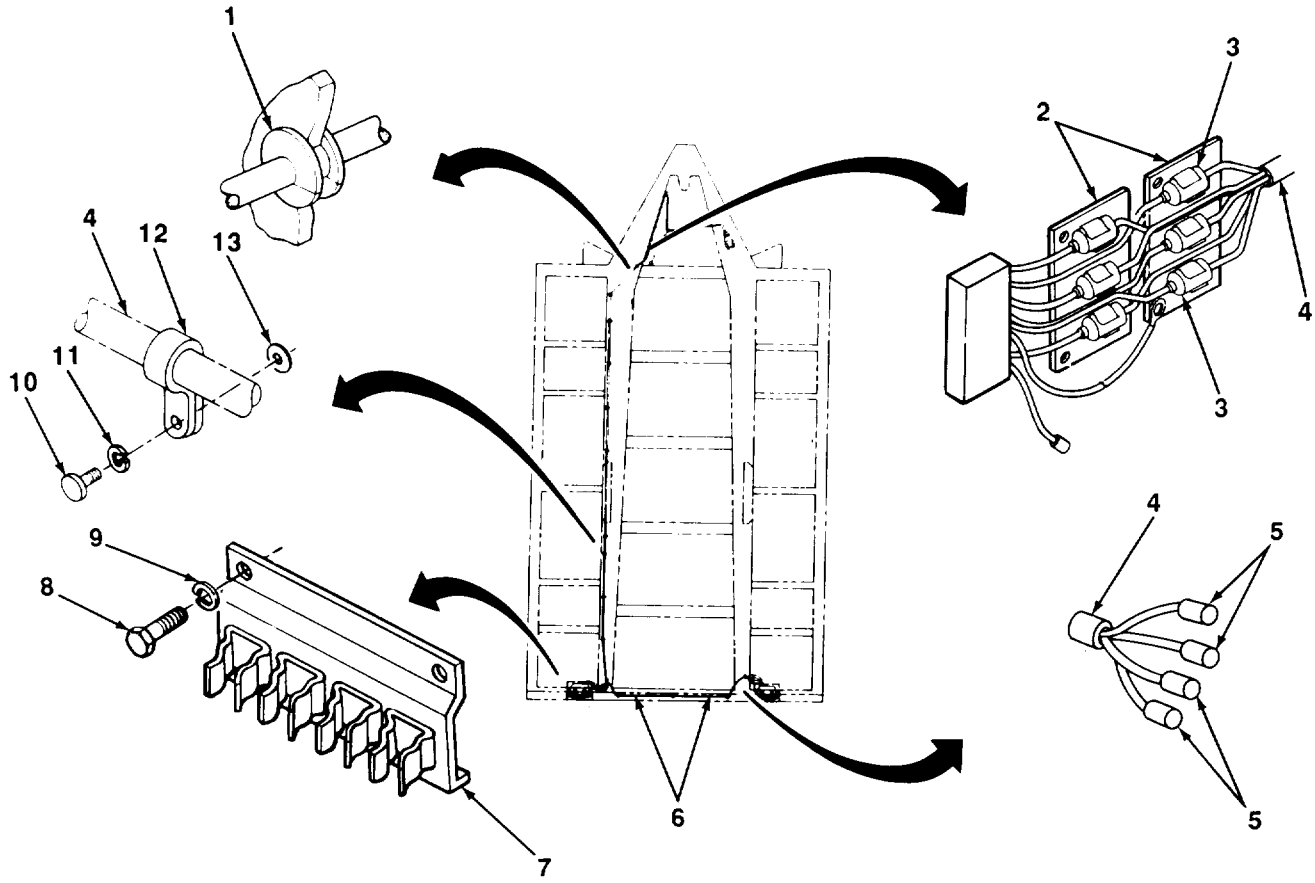

3. At each composite light, connect four wiring harness connectors (5) to composite light connectors. Install connectors in two mounting brackets (7), if present.

4. On XM1073, secure wiring harness (4) to 11 loops with 11 new straps.

5. On all except XM1073, install 11 straps (12) to frame with screws (10), new lockwashers (11), and flatwashers (13). Install four remaining straps for mounting for wheel chock holders (6).

NOTE

XM1073 has only one grommet.

6. Install three new grommets (1) to frame. Cut grommets if solid.

7. Connect six wiring harness connectors (3) to intervehicular cable assembly connectors. Install connectors in two clips (2).

FOLLOW-ON TASKS:

- Connect intervehicular cable assembly to towing vehicle (para 2-10).
- Check operation of lights.

4-26. WIRING HARNESS REPAIR.

This Task Covers:

a. Terminal Assembly Replacement
b. Contact Replacement
c. Marker Band Replacement

Initial Setup:

Equipment Conditions:

- Intervehicular cable assembly disconnected from towing vehicle (para 2-12).

Tools/Test Equipment

- General mechanic's tool kit
- Electric etcher

Materials/Parts

- Contacts (as required)
- Marker bands (as required)
- Terminal assemblies (as required)

a. TERMINAL ASSEMBLY REPLACEMENT

1. Slide shell (1) and insulator (2) off terminal assembly (3).
2. Cut terminal assembly (3) off wire (4). Discard terminal assembly.
3. Remove insulator (2) and shell (1) from wire (4).
4. Strip wire (4) approximately 1/8 in. (3 mm).
5. Slide shell (1) and insulator (2) over wire (4).
6. Place wire (4) in cylinder end of new terminal assembly (3) and crimp.
7. Slide insulator (2) and shell (1) over terminal assembly (3).

b. CONTACT REPLACEMENT

1. Slide shell (6) back over wire (4).
2. Remove slotted washer (7).
3. Cut contact (8) off wire (4). Discard contact.
4. Remove shell (6) from wire (4).
5. Strip wire (4) to approximate depth of new contact (8).
6. Slide shell (6) over wire (4).
7. Insert wire (4) into new contact (8) and crimp.
8. Place slotted washer (7) over wire (4) and slide shell (6) over slotted washer and contact (8).

4-26. WIRING HARNESS REPAIR (Con't).

c. MARKER BAND REPLACEMENT

1. Open tabs and remove marker band (5) from wire (4). Discard marker band.

2. Etch circuit number on new marker band (5). Refer to wiring diagram (para 4-27).

3. Place marker band (5) over wire (4) and bend tabs closed.

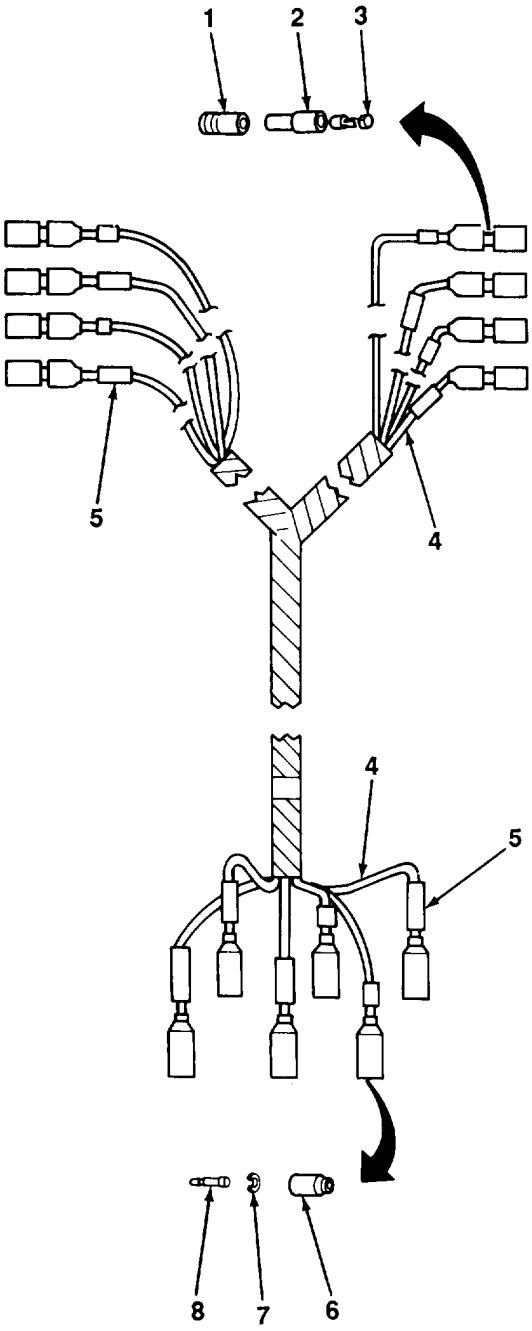

TA700934

4-27. WIRING DIAGRAM.

NOTE

This paragraph contains the wiring diagram for the XM979, XM1061, M1061A1, and XM1073 trailers. Consult this diagram when performing troubleshooting or maintenance on the trailer electrical system.

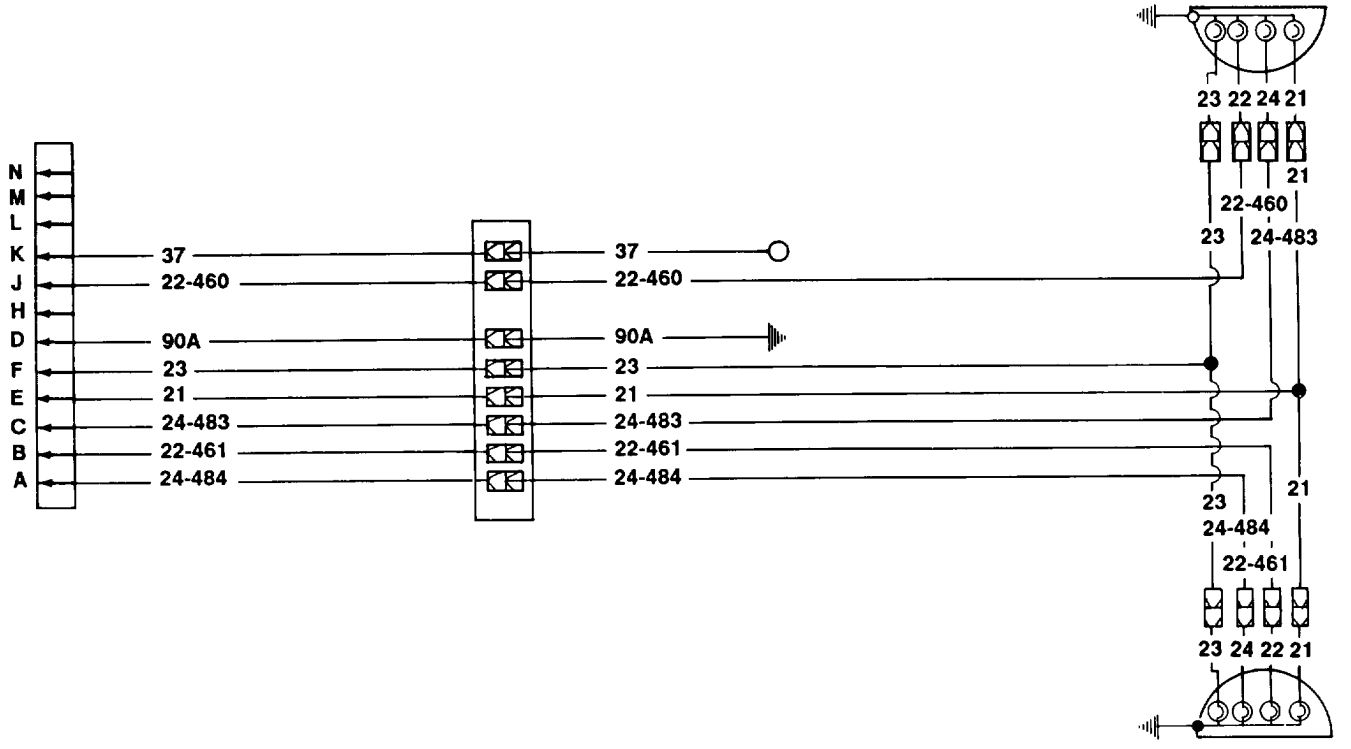

TA700935

Section VII. BRAKE SYSTEM MAINTENANCE

Paragraph Title	Page Number
Air Coupling Replacement	4-68
Air Filter Maintenance	4-65
Air Lines, Hoses, and Fittings Replacement	4-69
Air Reservoir and Cable Replacement	4-74
Airbrake Chamber Maintenance	4-76
Bleeding Hydraulic Brake System	4-49
Handbrake Maintenance	4-29
Inertia Brake Actuator and Master Cylinder Assembly Maintenance (XM979 and XM1061)	4-56
Inertia Brake Hydraulic Tubes and Hoses Replacement (XM979 and XM1061)	4-62
Master Cylinder Replacement	4-52
Relay Valve Replacement	4-72
Service Brake Adjustment	4-48
Service Brake Hydraulic Tubes, Hoses, and Fittings Replacement	4-54
Service Brake Maintenance	4-37
Shuttle Valve Replacement	4-51

4-28. HANDBRAKE MAINTENANCE.

This Task Covers:

a. Disassembly
b. Assembly
c. Adjustment

Initial Setup:

Equipment Conditions:

- Wheels chocked (para 4-17).

Tools/Test Equipment:

- General mechanic's tool kit
- Floor jack

Materials/Parts:

- One cotter pin (all except XM1073)
- Three cotter pins (XM1073)
- Ten lockwashers (all except XM1073)
- Fourteen lockwashers (XM1073)

a. DISASSEMBLY

NOTE

The following procedure applies to both left-hand and right-hand handbrakes. XM979, XM1061, and M1061A1 have one handbrake lever and cable on each side of trailer. XM1073 has one handbrake lever and two cables on each side.

4-28. HANDBRAKE MAINTENANCE (Con't).

1. Release handbrake by moving handbrake lever (4) rearward.

2. On all models except XM1073, remove cotter pin (3) and straight pin (1) and disconnect clevis (2) from handbrake lever (4). Discard cotter pin.

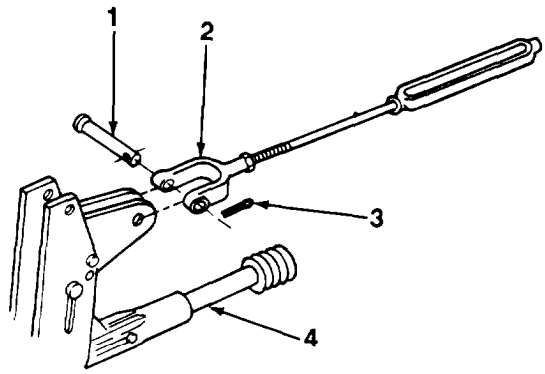

ALL EXCEPT XM1073

3. On XM1073, remove cotter pin (9) and straight pin (5) securing connecting link (6) to handbrake lever (4). Remove cotter pin (3), washer (7), and straight pin (1) securing each clevis (2) to rocking link bar (8). Discard cotter pins.

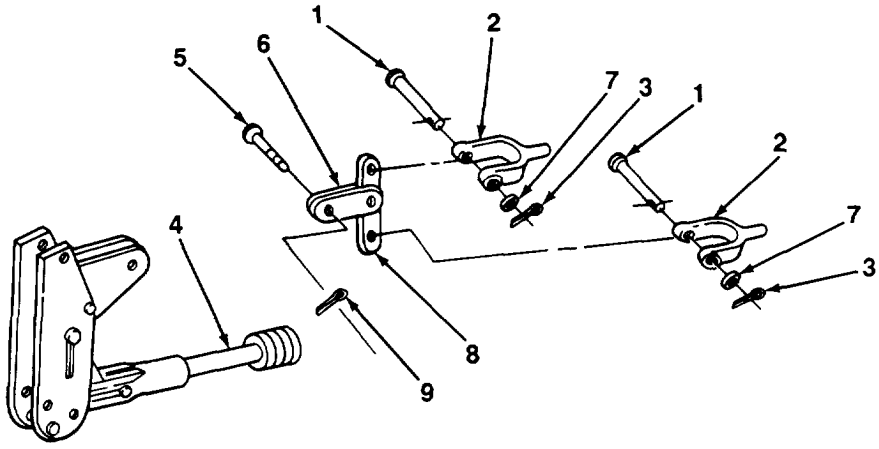

XM1073

TA700936

4-28. HANDBRAKE MAINTENANCE (Con't).

4. Remove three nuts (13), lockwashers (12), screws (11), and mud guard (10). Discard lockwashers.

5. Remove three nuts (14), lockwashers (17), screws (15), spacers (16), and handbrake lever (4). Discard lockwashers.

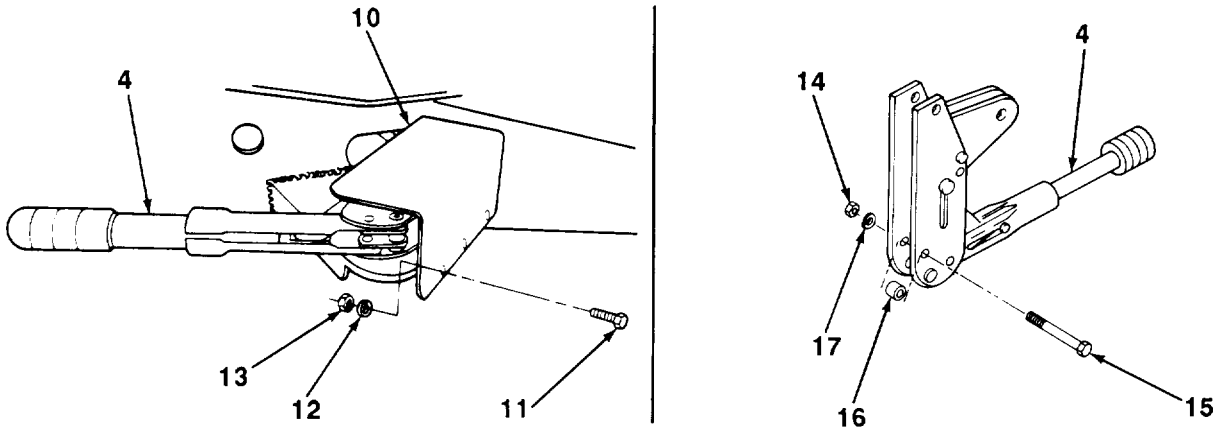

NOTE

There are two clevises, rods, turnbuckles, brackets, and handbrake cables on the XM979, XM1061, and M1061A1. There are four each on the XM1073. All are disassembled in the same manner.

6. Loosen jamnut (18) and remove clevis (2) from rod (19). Remove jamnut.

7. Loosen jamnut (20) and remove rod (19) from turnbuckle (21). Remove jamnut.

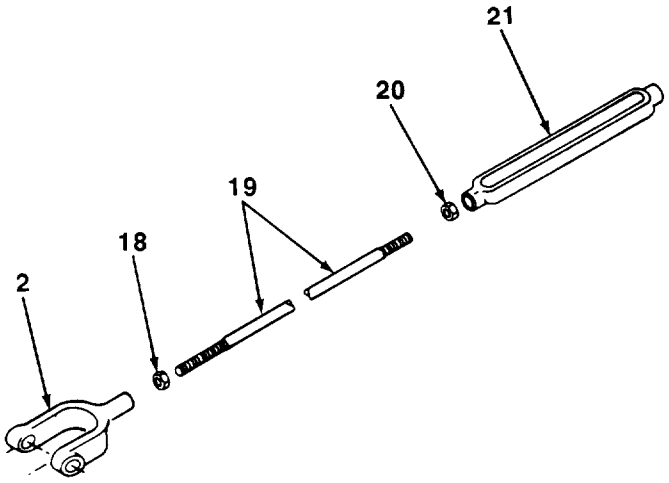

TA700937

4-28. HANDBRAKE MAINTENANCE (Con't).

8. Loosen two jamnuts (28). Remove turnbuckle (21) and jamnuts from handbrake cable (27).

9. Unhook spring (24) from handbrake cable (27) and frame.

10. Remove two nuts (26), bolts (22), and lockwashers (25). Remove bracket (23). Discard lockwashers.

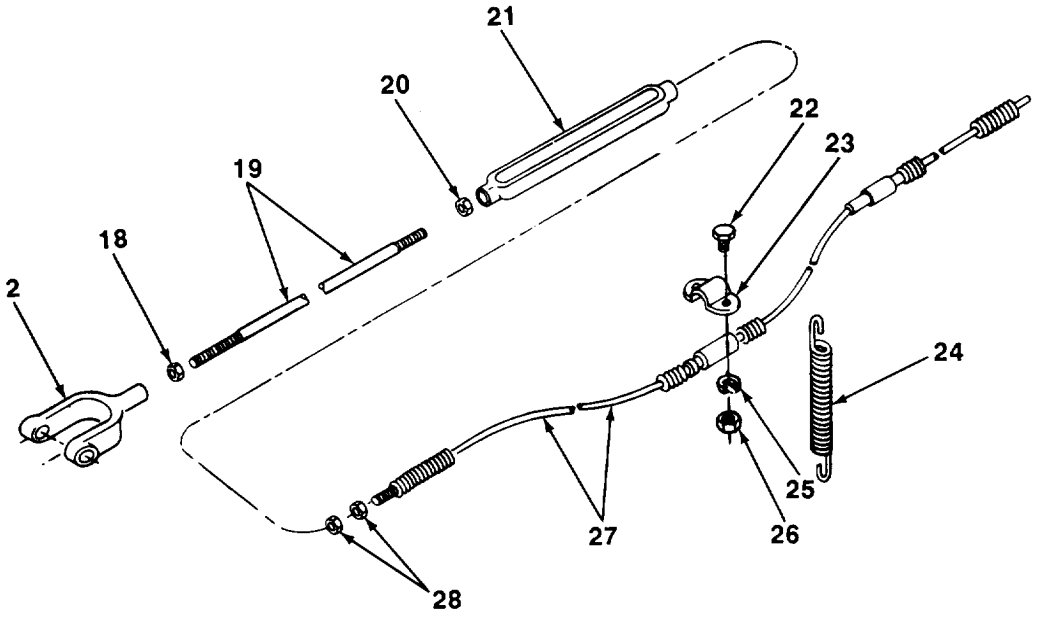

WARNING

DO NOT handle brakeshoes, brakedrums, or other brake components unless area has been properly cleaned. There may be asbestos dust on these components which can be dangerous if you touch It or breathe it. Wear an approved filter mask and gloves. Never use compressed air or a dry brush to clean brake components. Dust may be removed using an industrial-type vacuum cleaner. Clean dust or mud away from brake components with water and a wet, soft brush or cloth. Failure to follow this warning may result in serious illness or death to personnel.

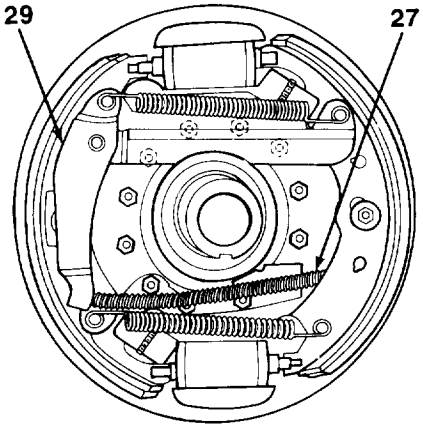

11. Remove hub and brakedrum from wheel assembly of handbrake cable (27) to be removed (para 4-44).

4-28. HANDBRAKE MAINTENANCE (Con't).

12. Unhook handbrake cable (27) from lever (29) and remove through rear of backing plate (30).

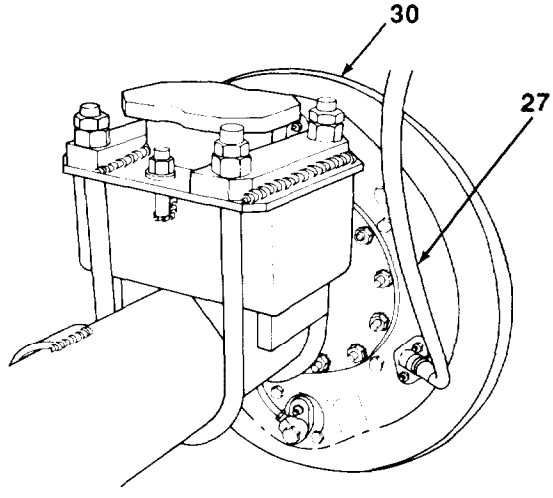

b. ASSEMBLY

NOTE

The following procedure applies to both left-hand and right-hand handbrakes. XM979, XM1061, and M1061A1 have one handbrake lever and cable on each side of trailer. XM1073 has one handbrake lever and two cables on each side.

1. Feed handbrake cable (27) through rear of backing plate (30) and hook on, lever (29).
2. Secure other end of handbrake cable (27) with bracket (23), two bolts (22), new lockwashers (25), and nuts (26).
3. Install hub and brakedrum (para 4-44). Install tire and wheel (para 4-43).
4. Loosely install two jamnuts (28) and turnbuckle (21) on end of handbrake cable (27).
5. Loosely install jamnut (20) on end of rod (19). install rod on turnbuckle (21).
6. Loosely install jamnut (18) and clevis (2) on end of rod (19).

TA700939

4-28. HANDBRAKE MAINTENANCE (Con't).

7. Install handbrake lever (4) with three screws (15), spacers (16), new lockwashers (17), and nuts (14).

8. On all models except M1073, connect clevis (2) to handbrake lever (4) with straight pin (1) and new cotter pin (3). Tighten jamnut (18).

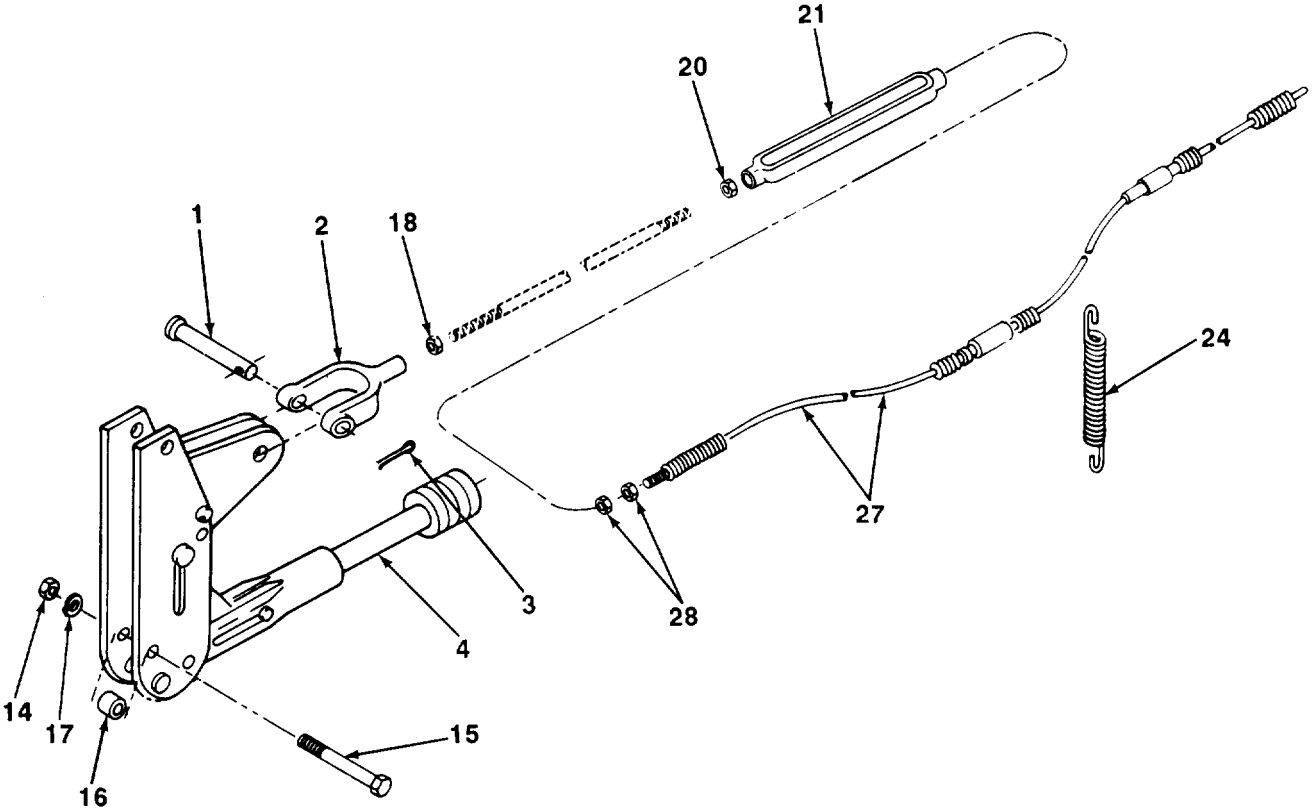

9. On XM1073, secure each clevis (2) to rocking link bar (8) with straight pin (1), washer (7), and new cotter pin (3). Secure connecting link (6) to handbrake lever (4) with straight pin (5) and new cotter pin (9). Tighten jamnut (18).

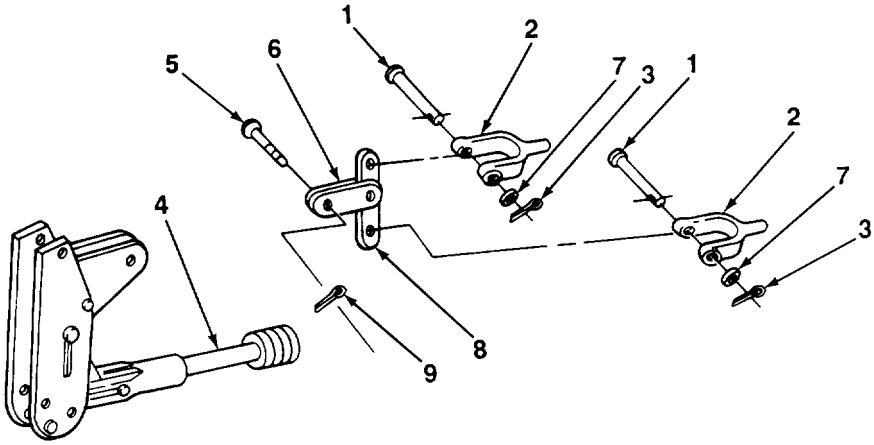

XM1073

TA700940

4-28. HANDBRAKE MAINTENANCE (Con't).

10. Install mud guard (10) with three screws (11), new lockwashers (12), and nuts (13).

11. Hook spring (24) to handbrake cable (27) and frame.

12. Perform adjustment (subpara c).

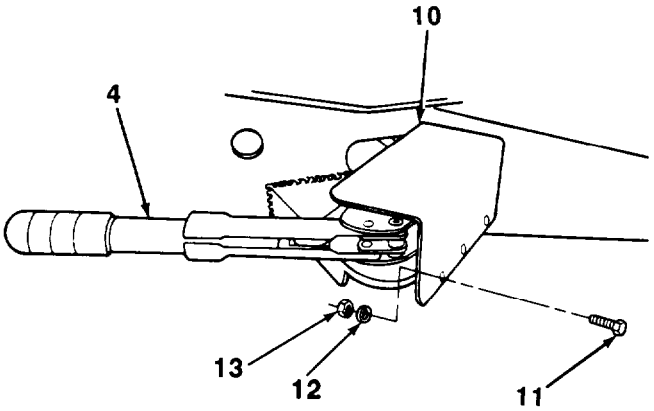

c. ADJUSTMENT

1. Block wheels on opposite side of trailer using wheel chocks.

2. Raise trailer until wheel of handbrake being adjusted is completely off ground.

3. Drain air reservoir pressure (para 3-9).

4. Release handbrake by moving handbrake lever (4) rearward. Turn adjustment knob (31) counterclockwise as far as possible.

5. If necessary, loosen jamnuts (20 and 28) on either side of turnbuckle (21).

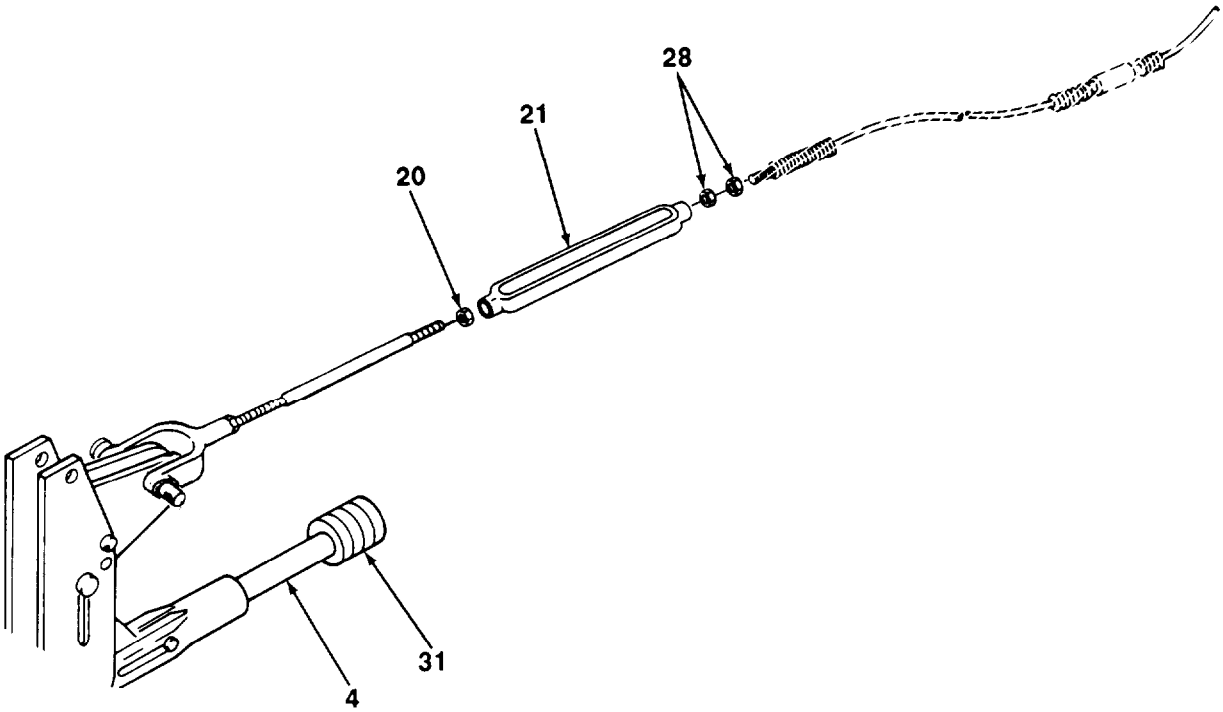

TA700941

4-28. HANDBRAKE MAINTENANCE (Con't).

6. While rotating wheel, tighten turnbuckle (21) until brake begins to drag.

7. Back off turnbuckle (21) until wheel turns freely.

8. Check adjustment by applying handbrake using handbrake lever (4). If handbrake lever will not fully extend, loosen turnbuckle (21) slightly.

9. Tighten jamnuts (20 and 28).

10. Lower trailer and return wheel chocks to holders.

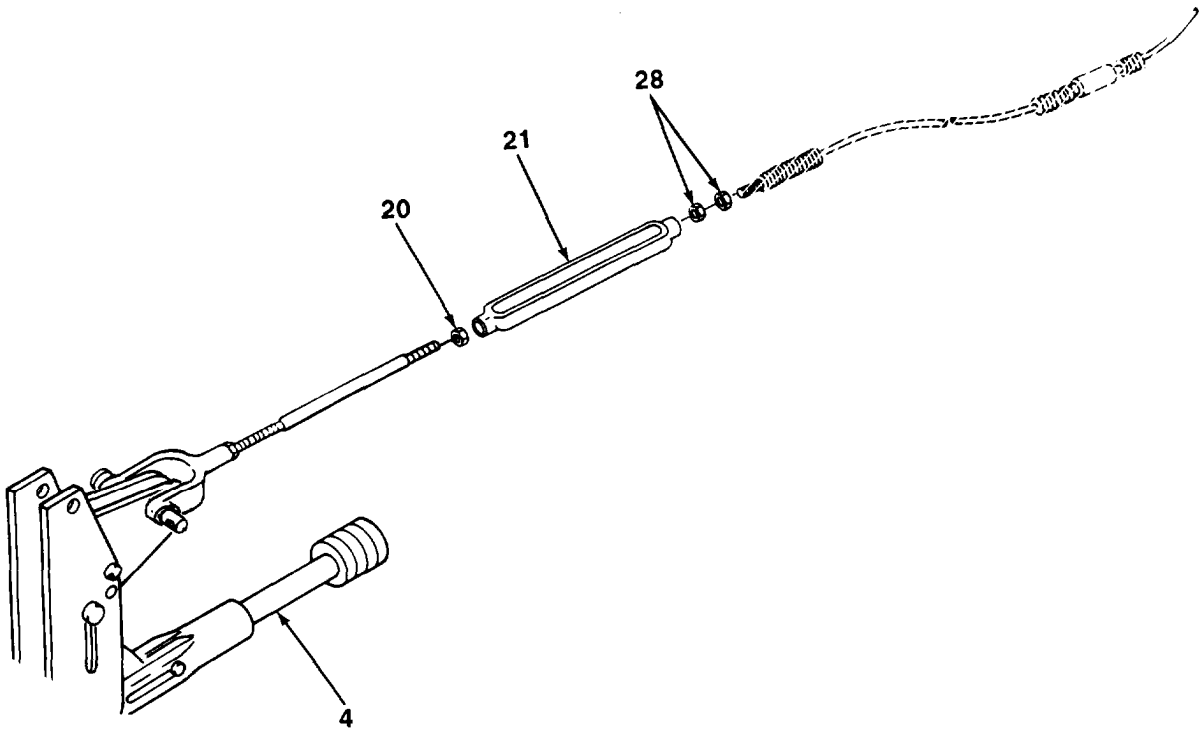

FOLLOW-ON TASKS:

- Lubricate handbrake lever (Chapter 3, Section 1).

TA700942

4-29. SERVICE BRAKE MAINTENANCE.

a. Disassembly
b. Cleaning and Inspection
c. Assembly

Initial Setup:

Equipment Conditions:

- Hub and brakedrum removed (para 4-44).

Tools/Test Equipment:

- General mechanic's tool kit
- Drain pan
- Floor jack
- Jackstand

Materiais/Parts:

- Rags (Item 12, Appendix E)
- Dry cleaning solvent (Item 14, Appendix E)
- Thirty lockwashers

a. DISASSEMBLY

WARNING

DO NOT handle brakeshoes, brakedrums, or other brake components unless area has been properly cleaned. There may be asbestos dust on these components which can be dangerous if you touch it or breathe it. Wear an approved filter mask and gloves. Never use compressed air or a dry brush to clean brake components. Dust may be removed using an industrial-type vacuum cleaner. Clean dust or mud away from brake components with water and a wet, soft brush or cloth. Failure to follow this warning may result in serious illness or death to personnel.

1. Release handbrake lever.
2. Disconnect handbrake cable (2) from lever (1).

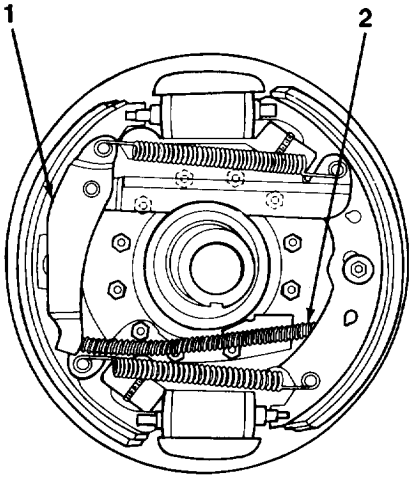

TA700943

4-29. SERVICE BRAKE MAINTENANCE (Con't).

3. Remove two springs (16) from four pins (7).

4. Remove nut (3), lockwasher (4), washer (5), spacer (6), and bolt (9) from brakeshoe (8) and backing plate (10). Discard lockwasher.

5. Remove brakeshoe (8) and connecting link (17) from backing plate (10).

6. Move lever (1) over to expose screw (15).

7. Remove screw (15), lockwasher (14), washer (13), and spacer (11). Discard lockwasher.

8. Remove brakeshoe (12) and lever (1) from backing plate (10).

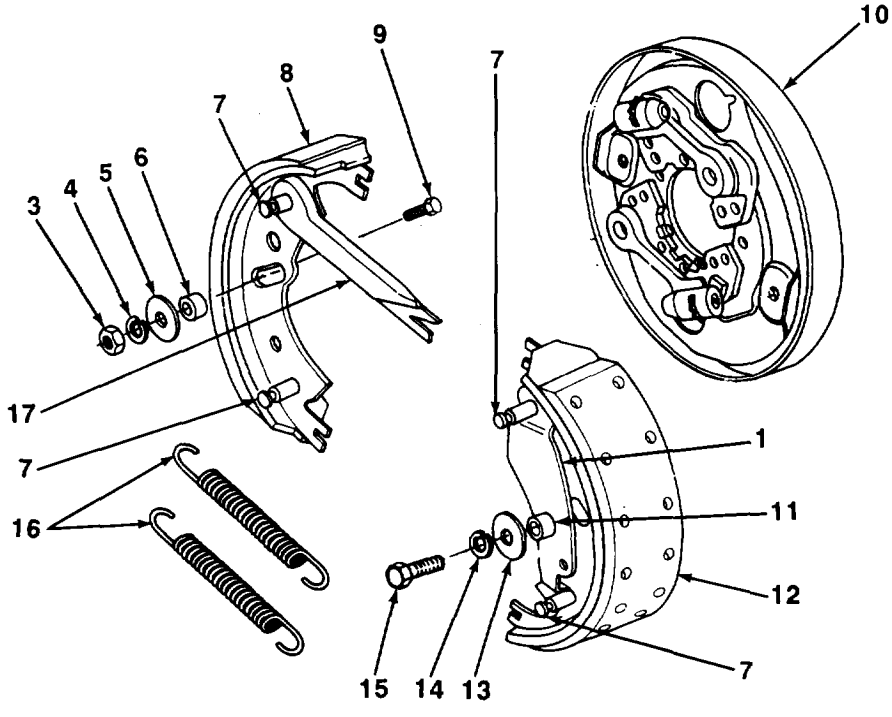

9. Remove slotted washer (18), spring tension washer (19), washer (20), and connecting link (17) from pin (7) at top of brakeshoe (8).

10. Remove nut (22), lockwasher (21), and pin (7) from top of brakeshoe (8). Discard lockwasher.

11. Remove slotted washer (23), spring tension washer (24), washer (25), and lever (1) from pin (7) at top of brakeshoe (12).

12. Remove nut (26), lockwasher (27), and pin (7) from top of brakeshoe (12). Discard lockwasher.

13. Remove two nuts (28), lockwashers (29), and pins (7) from bottom of brakeshoes (8 and 12). Discard lockwashers.

TA700944

4-29. SERVICE BRAKE MAINTENANCE (Con't).

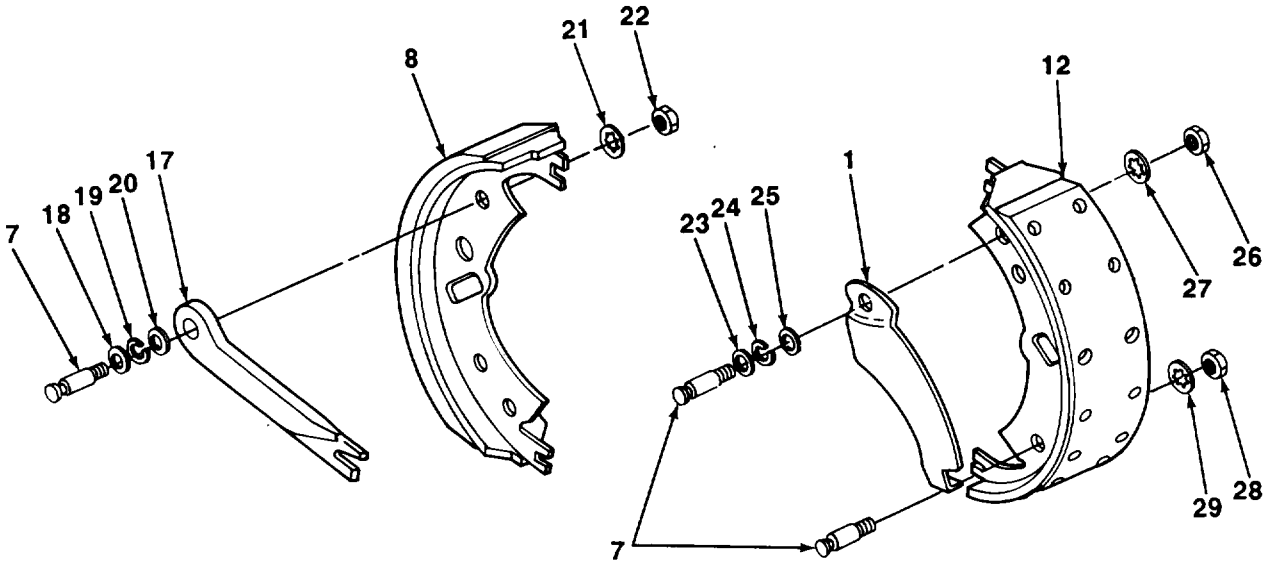

NOTE

Use a drain pan to catch any draining brake fluid. Clean up all spills.

14. Disconnect tube assembly (30) from multiple connector (31) at backing plate (10).

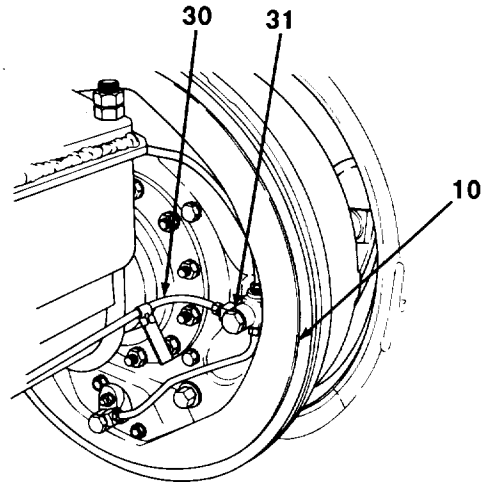

TA700945

4-29. SERVICE BRAKE MAINTENANCE (Con't).

15. Remove two fluid passage bolts (38), spacers (37), tees (36), and washers (35) from wheel cylinders (41).

16. Remove four screws (34), lockwashers (33), two wheel cylinders (41), and shields (32) from backing plate (10). Discard lockwashers.

17. Remove bleeder valve (40) from each wheel cylinder (41).

18. Remove two tees (36) from tube assemblies (39).

19. Remove two tube assemblies (39) from multiple connector (31).

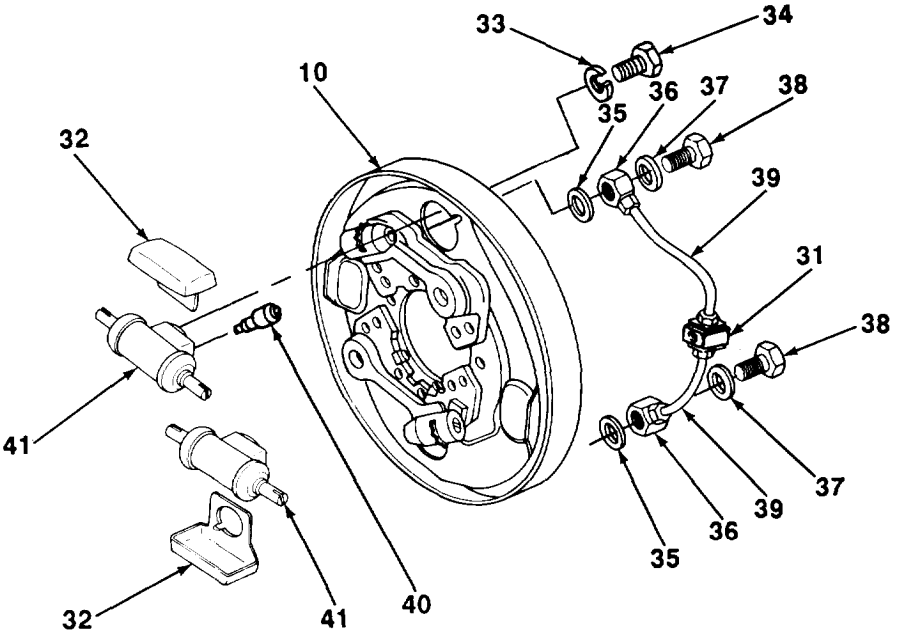

20. Remove four screws (50), lockwashers (51), and two support assemblies (53) from backing plate (10). Discard lockwashers.

21. Remove adjusting screw (42) and slack adjusting wheel (43) from each support assembly (53).

22. Remove two nuts (44), lockwashers (45), pinions (46), washers (47), spring and bolt assemblies (49), and washers (48) from backing plate (10). Discard lockwashers.

23. Remove two pins (52) from backing plate (10).

TA700946

4-29. SERVICE BRAKE MAINTENANCE (Con't).

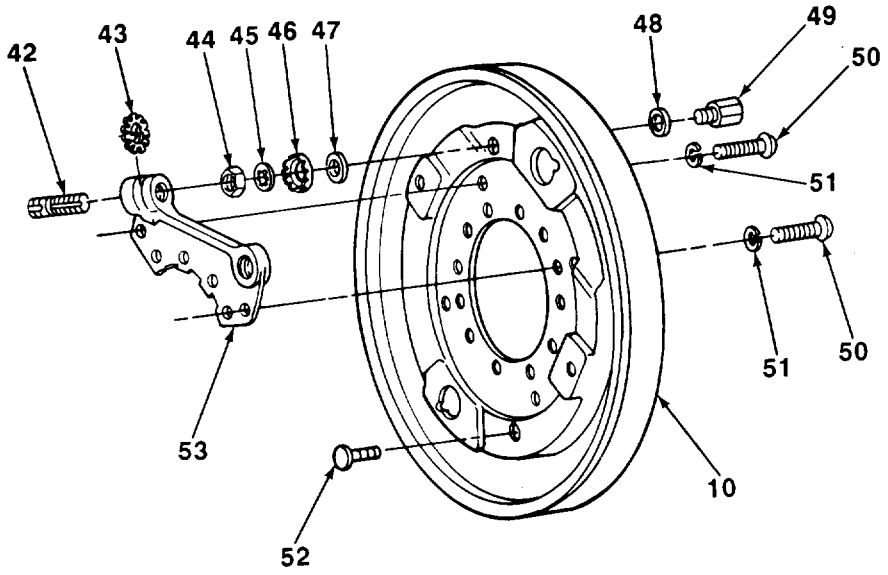

NOTE

- **On XM797, XM1061, and M1061A1, front brakes are equipped with a cable guide bracket. Rear brakes have an access cover.**
- **XM1073 front and rear brakes are equipped with a cable guide cover.**

24. Remove two nuts (57) and lockwashers (56). Remove either cable guide bracket (55) or access cover (54). Discard lockwashers.

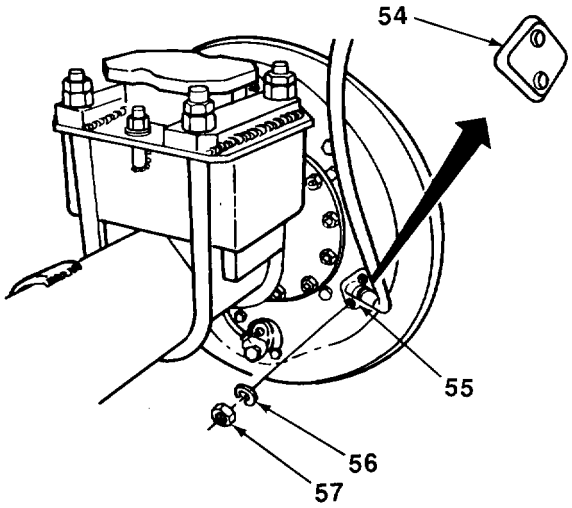

TA700947

4-29. SERVICE BRAKE MAINTENANCE (Con't).

25. Remove twelve nuts (61) and lockwashers (62) from rear of backing plate (10). Discard lockwashers,

NOTE

Cable ramp Is found on front brakes of all models and on front and rear brakes of XM1073.

26. Remove twelve screws (58), cable ramp (59), and backing plate (10) from axle (60).

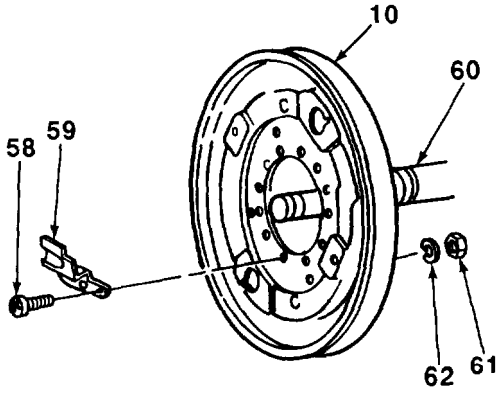

b. CLEANING AND INSPECTION

WARNING

- **DO NOT handle brakeshoes, brakedrums, or other brake components unless area has been properly cleaned. There may be asbestos dust on these components which can be dangerous if you touch It or breathe it. Wear an approved filter mask and gloves. Never use compressed air or a dry brush to clean brake components. Dust may be removed using an industrial-type vacuum cleaner. Clean dust or mud away from brake components with water and a wet, soft brush or cloth. Failure to follow this warning may result In serious illness or death to personnel.**
- **Dry cleaning solvent, P-D-680, is toxic and flammable. Always wear protective goggles and gloves, and use only in a well-ventilated area. Avoid contact with skin, eyes, and clothes, and DO NOT breathe vapors. DO NOT use near open flame or excessive heat. The solvent's flash point is 100°F-138°F (38°C-59°C). If you become dizzy while using cleaning solvent, immediately get fresh air and medical help. If solvent contacts eyes, immediately wash your eyes and get medical aid.**

1. Clean all parts with dry cleaning solvent. Dry thoroughly.
2. Inspect all parts for damage. Replace any damaged parts.
3. Inspect brakeshoe surfaces for cracks, distortion, and excessive wear. Brakeshoe linings should have a minimum thickness of 1/8 in. (3.2 mm). Replace brakeshoes if cracked or if lining thickness is less than 1/8 in. (3.2 mm).

TA700948

4-29. SERVICE BRAKE MAINTENANCE (Con't).

c. ASSEMBLY

WARNING

Do not allow grease to contact brakeshoe linings. Linings can absorb grease and oil, causing early glazing of linings and very poor braking action. Failure to follow this warning may cause serious Injury or death to personnel.

NOTE

Cable ramp is found on front brakes of all models and on front and rear brakes of XM1073.

1. Position cable ramp (59) and backing plate (10) on axle (60) and install twelve screws (58), new lockwashers (62), and nuts (61).

NOTE

- **On XM797, XM1061, and M1061A1, front brakes are equipped with a cable guide bracket. Rear brakes have an access cover.**
- **XM1073 front and rear brakes are equipped with a cable guide cover.**

2. Install cable guide bracket (55) or access cover (54) on backing plate (10) with two new lockwashers (56) and nuts (57).

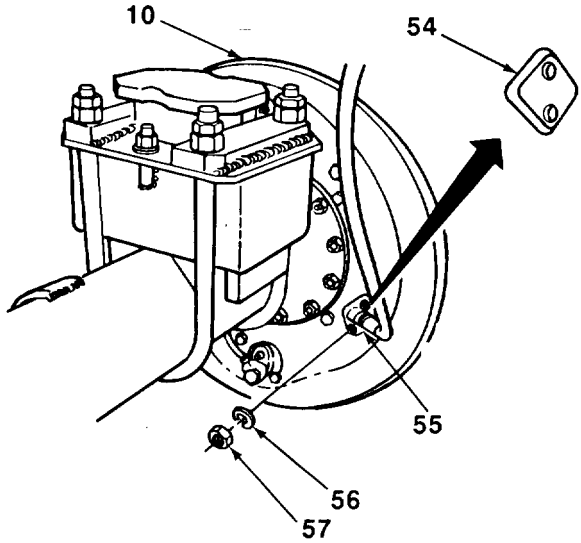

TA700949

4-29. SERVICE BRAKE MAINTENANCE (Con't).

3. Install two pins (52) in backing plate (10).

4. Install two washers (48) on spring and bolt assemblies (49) and install in backing plate (10) with two washers (47), pinions (46), new lockwashers (45) and nuts (44).

5. Position slack adjusting wheel (43) on each support assembly (53) and install adjusting screw (42).

6. Install two support assemblies (53) on backing plate (10) with four new lockwashers (51) and screws (50).

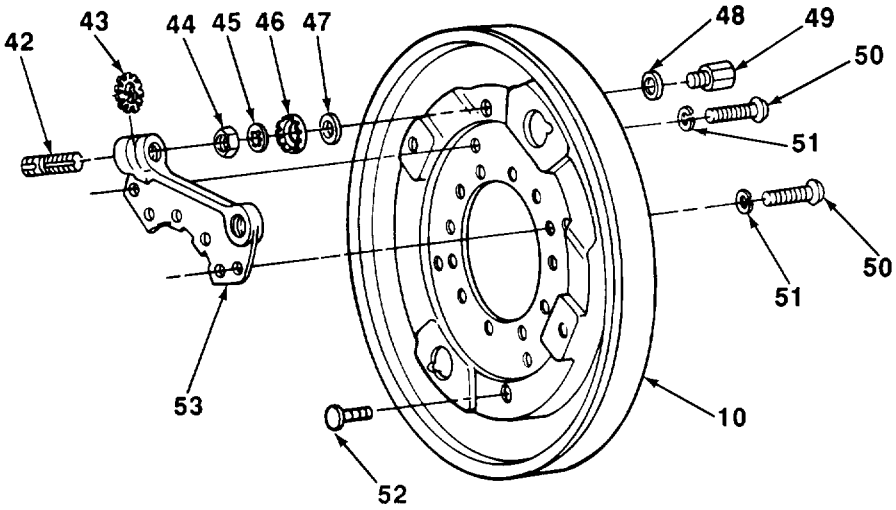

7. Install bleeder valve (40) in each wheel cylinder (41).

8. Install two wheel cylinders (41) and shields (32) on backing plate (10) with four new lockwashers (33) and screws (34).

9. Install two tube assemblies (39) on multiple connector (31).

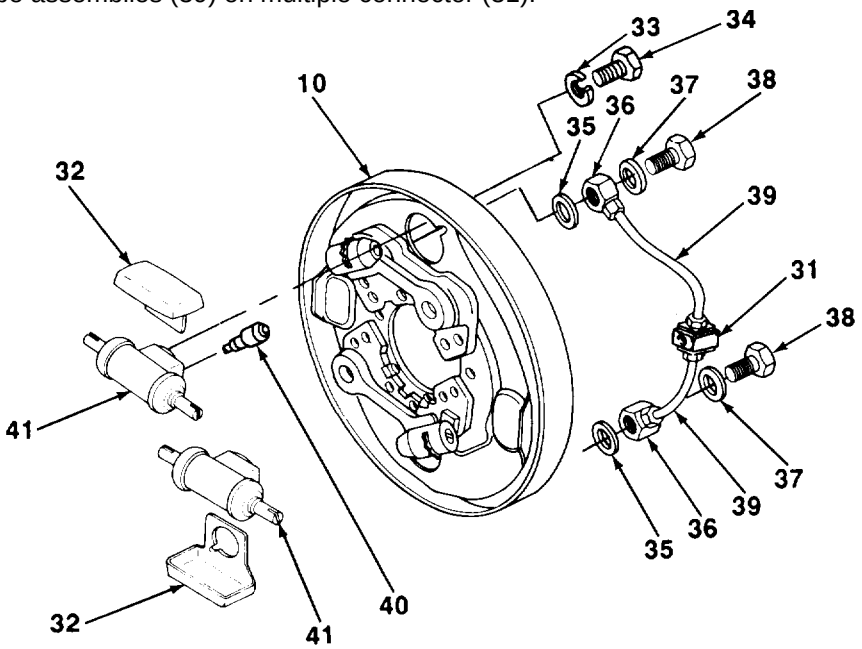

TA700950

4-29. SERVICE BRAKE MAINTENANCE (Con't).

10. Install two tees (36) on tube assemblies (39).
11. Install two tees (36) on wheel cylinders (41) with two washers (35), spacers (37), and fluid passage bolts (38).
12. Connect tube assembly (30) to multiple connector (31) on backing plate (10).

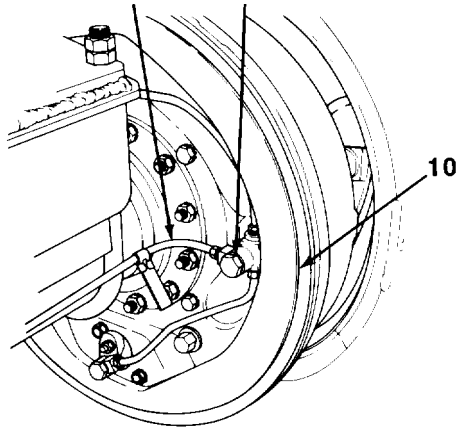

13. Install two pins (7) on bottom of brakeshoes (8 and 12) with two new lockwashers (29) and nuts (28).
14. Install pin (7) on topofbrakeshoe(12) with new Iockwasher (27) and nut (26).
15. Install lever (1) on pin (7) at top of brakeshoe (12) with washer (25), spring tension washer (24), and slotted washer (23).
16. Install pin (7) on top of brakeshoe (8) with new Iockwasher (21) and nut (22).
17. Install connecting link (17) on pin (7) at top of brakeshoe (8) with washer (20), spring tension washer (19), and slotted washer (18).

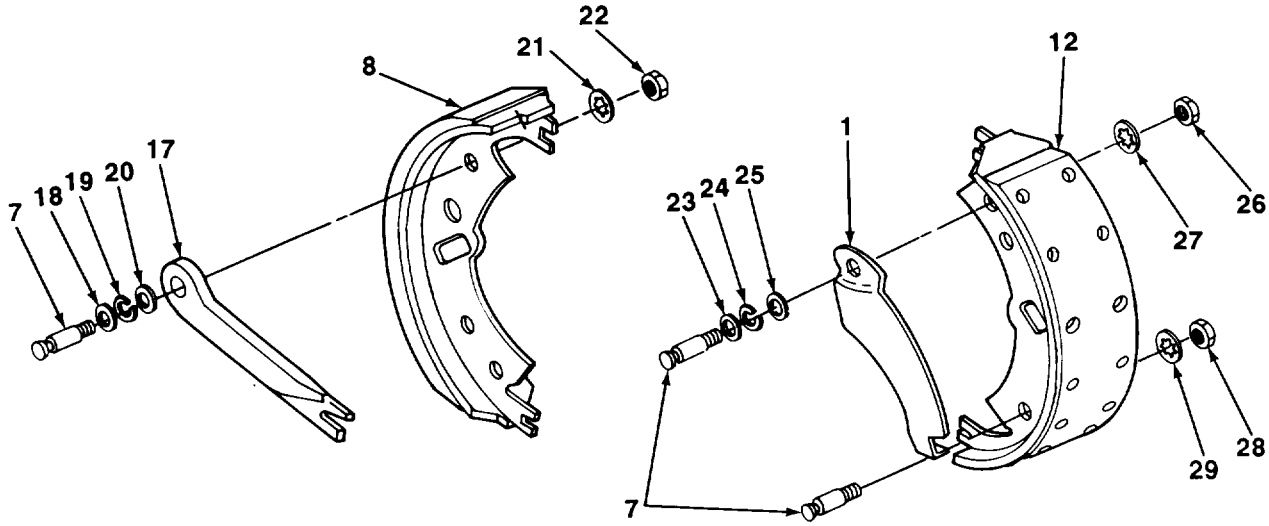

TA700951

4-29. SERVICE BRAKE MAINTENANCE (Con't).

18. Install brakeshoe(12) and lever (1) on backing plate (10) with spacer (11), washer (13), new lockwasher (14) and screw (15).

19. Install brakeshoe (8) and connecting link (17) on backing plate (10) with bolt (9), spacer (6), washer (5), new lockwasher (4), and nut (3).

20. Install two springs (16) on four pins (7).

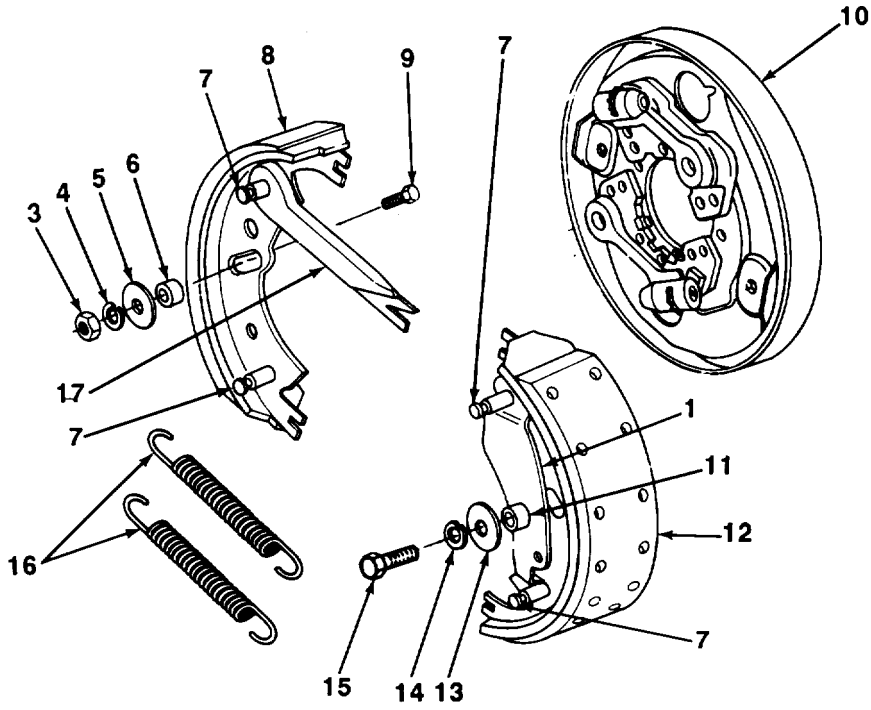

TA700952

4-29. SERVICE BRAKE MAINTENANCE (Con't).

21. Connect handbrake cable (2) to lever (1).

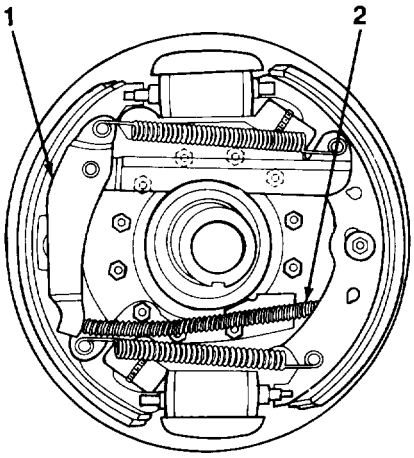

FOLLOW-ON TASKS:

- Install hub and brakedrum (para 4-44).
- Adjust service brakes (para 4-30).
- Bleed brakes (para 4-31).

TA700953

4-30. SERVICE BRAKE ADJUSTMENT.

This Task Covers: Adjustment

Initial Setup:

Equipment Conditions

- Air reservoir pressure drained (para 3-9).

Tools/Test Equipment:

- General mechanic's tool kit
- Floor jack
- Two jackstands

ADJUSTMENT

1. Raise axle and place on jackstands. Wheels must rotate freelv.
2. Turn one adjusting screw (2) on rear of backing plate (1) to bring brakeshoe lining in contact with brakedrum until brake drags slightly when wheel is turned by hand. Back off adjusting screw just enough to allow wheel to rotate freely.
3. Repeat step 2 with other adjusting screw (2), which is rotated in opposite direction to loosen and tighten. Make both adjustments as uniform as possible.
4. Repeat steps 2 and 3 to adjust brakes at other wheel.
5. Remove jackstands and lower axle.

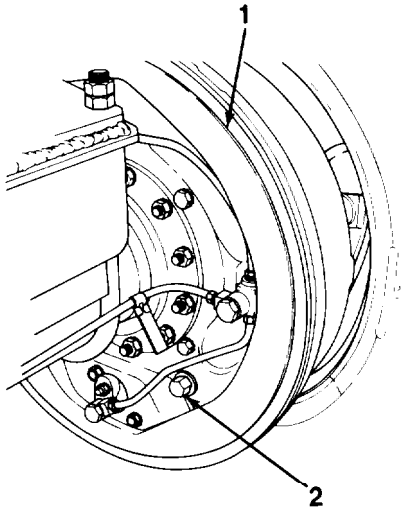

TA700954

4-31. BLEEDING HYDRAULIC BRAKE SYSTEM.

This Task Covers: Manual Bleeding

Initial Setup:

Equipment Conditions:

- Trailer coupled to towing vehicle (para 2-10).
- Master cylinder serviced (Chapter 3, Section I).

Tools/Test Equipment:

- General mechanic's tool kit
- Drain pan

Materials/Parts:

- Brake fluid (Item 7, Appendix E)
- Rags (Item 12, Appendix E)
- Clear quart container
- Plastic tubing, 18 in. (46 cm) long

Personnel Required: Two

MANUAL BLEEDING

NOTE

- **Master cyiinder must be kept full during bleeding to prevent air from entering hydraulic brake system.**
- **Place a drain pan under components as required to catch any draining brake fluid. Clean up all spills.**
- **To bleed inertia brake system, perform steps 1 through 6.**
- **To bleed brakes on M1061A1 and XM1073, perform steps 7 through 11.**

1. On, XM979 and XM1061, apply inertia brakes by pulling emergency brake cable (1). Bleed inertia brake master cylinder through access hole (2) in reach tube (3) at top rear of master cylinder housing. Whenbubbles no longer appear, close bleed plug.

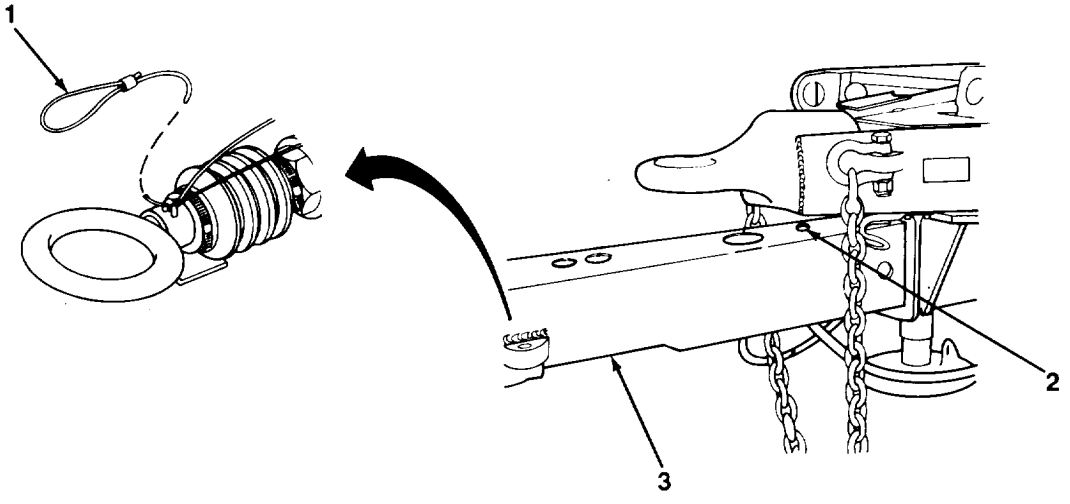

TA700955

4-31. BLEEDING HYDRAULIC BRAKE SYSTEM (Con't).

2. Disconnect hose assembly (6) from shuttle valve (4).

3. Connect plastic tubing to nut connector on fitting (5) and insert other end of plastic tubing in container about half full of brake fluid.

NOTE

Ensure that end of plastic tubing remains submerged In brake fluid for entire procedure.

4. Have assistant press and hold brake pedal on towing vehicle slowly and smoothly. When brake fluid flow contains no air bubbles, disconnect plastic tubing from nut connector on fitting (5) and connect hose assembly (6).

5. Perform steps 2 through 4 for other shuttle valve (4).

6. Pull emergency brake release cable (7) to release inertia brakes.

7. Attach plastic tubing to wheel cylinder bleeder valve (8) and place other end in container about half full of brake fluid.

8. Have assistant press and hold brake pedal on towing vehicle slowly and smoothly and open wheel cylinder bleeder valve (8).

9. When brake fluid contains no air bubbles, close wheel cylinder bleeder valve (8) and remove plastic tubing.

10. Repeat steps 7 through 9 for other wheel cylinder bleeder valve (8).

11. Repeat steps 7 through 10 for each wheel.

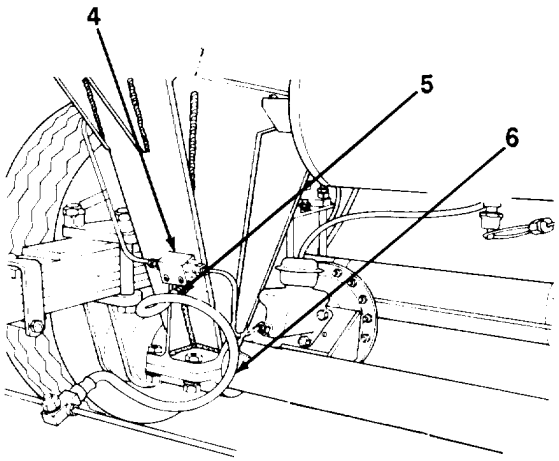

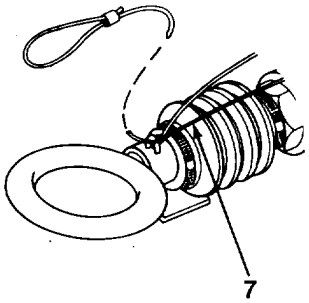

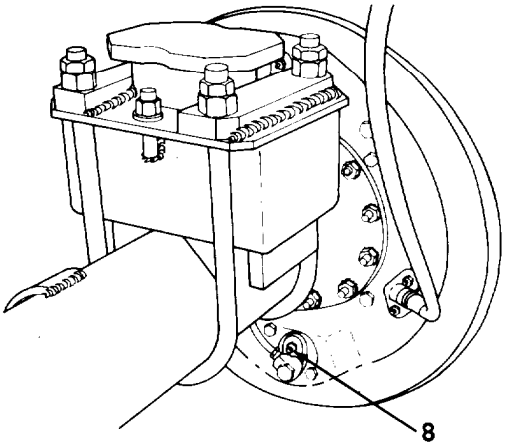

TA700956

4-32. SHUTTLE VALVE REPLACEMENT.

This Task Covers:

a. Removal

b. Installation

Initial Setup:

Equipment Conditions:

- Air reservoir pressure drained (para 3-9).

Tools/Test Equipment:

- General mechanic's tool kit
- Drain pan

Materials/Parts:

- Rags (Item 12, Appendix E)
- Marker tags (item 16, Appendix E)
- Two lockwashers

a. REMOVAL

NOTE

Use a drain pan to catch any draining brake fluid. Clean up ail spills.

1. Tag, disconnect, and cap two tube assemblies (1) and hose assembly (5).
2. Remove two screws (4), lockwashers (3), and shuttle valve (2). Discard lockwashers.

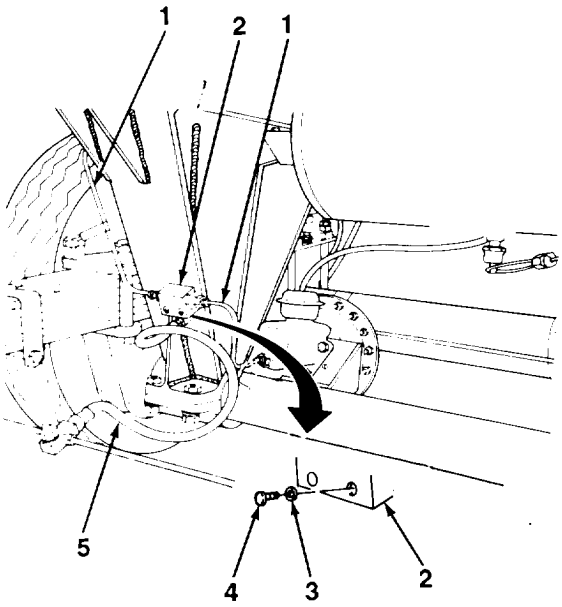

b. INSTALLATION

1. install shuttle valve (2) with two screws (4) and new lockwashers (3).
2. Remove caps and connect two tube assemblies (1) and hose assembly (5) to shuttle valve (2). Remove tags

FOLLOW-ON TASKS:

- Bleed brakes (para 4-31).

TA700957

4-33. MASTER CYLINDER REPLACEMENT.

This Task Covers:

a. Removal

b. Installation

Initial Setup:

Equipment Conditions:

- Air reservoir pressure drained (para 3-9).

Tools/Test Equipment:

- General mechanic's tool kit
- Drain pan

Materials/Parts:

- Rags (Item 12, Appendix E)
- One gasket
- Three lockwashers

a. REMOVAL

NOTE

Use a drain pan to catch any draining brake fluid. Clean up all spills.

1. Disconnect tube assembly (1) from reducer (4). Remove reducer and gasket (3) from master cylinder (2). Discard gasket.
2. Remove three nuts (12), lockwashers (11), and master cylinder (2) from bracket (10) and studs on airbrake chamber (9). Discard lockwashers.
3. Remove boot (6) from master cylinder (2). Remove collar (7) and retain.
4. Remove filler cap (5) and drain brake fluid from master cylinder (2).

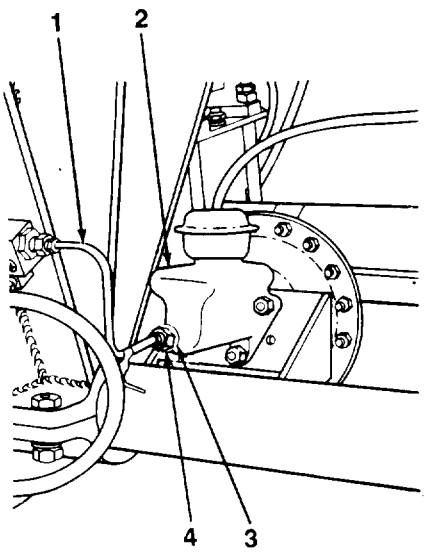

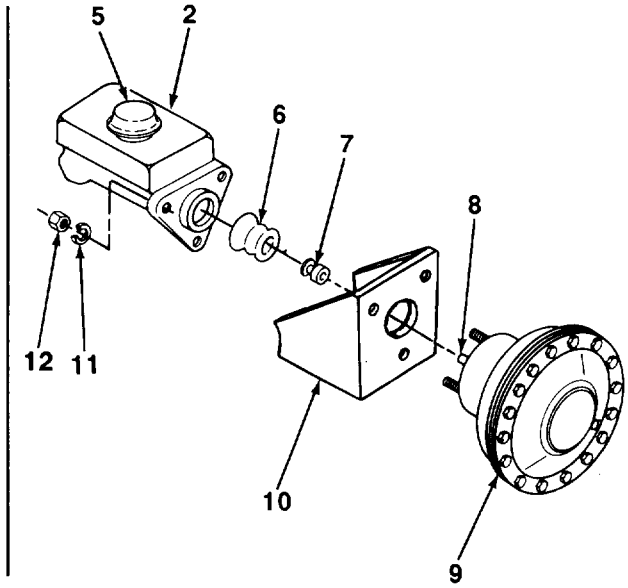

TA700958

4-33. MASTER CYLINDER REPLACEMENT (Con't).

b. INSTALLATION

1. Install boot (6) on master cylinder (2).
2. Install collar (7) on rod (8). To ensure a moisture-proof seal, collar must seat on preformed packing located on rod inside of airbrake chamber (9). Position master cylinder (2) for installation.
3. Secure master cylinder (2) and airbrake chamber (9) to mounting bracket (10) with three nuts (12) and new lockwashers (11).
4. install new gasket (3) and reducer (4) on master cylinder (2). Connect tube assembly (1) to reducer.

FOLLOW-ON TASKS:

- Bleed brakes (para 4-31).

4-34. SERVICE BRAKE HYDRAULIC TUBES, HOSES, AND FITTINGS REPLACEMENT.

This Task Covers:

a. Removal

b. Installation

Initial Setup:

Equipment Conditions:

- Air reservoir pressure drained (para 3-9).

Tools/Test Equipment:

- General mechanic's tool kit
- Drain pan

Materials/Parts

- Rags (Item 12, Appendix E)
- Six lockwashers

NOTE

- **Service brake hydraulic tubes, hoses, and fittings are replaced in a similar manner for all trailers. XM979 or XM1061 is shown here.**
- **Use a suitable container to catch any draining brake fluid. Clean up all spills.**

a. REMOVAL

1. Disconnect tube assembly (1) from multiple connector (2) on backing plate and multiple connector (6) on front axle. Remove tube assembly from front axle.
2. On all except M1061A1, disconnect hose assembly (3) from multiple connector (6) on front axle and fitting on shuttle valve (4). Remove hose assembly from front axle.
3. On all except M1061A1, disconnect hose assembly (5) from fitting on shuttle valve (4) and reducer on master cylinder (8). Remove hose assembly.
4. On M1061A, disconnect hose assembly (7) from multiple connector (6) on front axle and reducer on master cylinder (8). Remove hose assembly.
5. Remove tube assembly (13) from multiple connector (12) on backing plate and multiple connector (6) on front axle.
6. Remove two screws (16), lockwashers (15), and clamps (14). Remove tube assembly (13) from front axle. Discard lockwashers.
7. Remove nut (11), lockwasher (10), screw (9), if present, and multiple connector (6). Discard lockwasher.
8. Repeat steps 1 through 7 for hoses, tubes, and fittings on rear axle.

b. INSTALLATION

1. Install multiple connector (6) on front axle with screw (9), if present, new lockwasher (10), and nut(11).
2. Position tube assembly (13) on front axle and install two clamps(14) with two screws(16) and new lockwashers (15).
3. Connect tube assembly (13) to multiple connector(12) on backing plate and multiple connector(6) on front axle.
4. On M1061A1, connect hose assembly (7) to reducer on master cylinder (8) and multiple connector(6) on front axle.

4-34. SERVICE BRAKE HYDRAULIC TUBES, HOSES, AND FITTINGS REPLACEMENT (Con't).

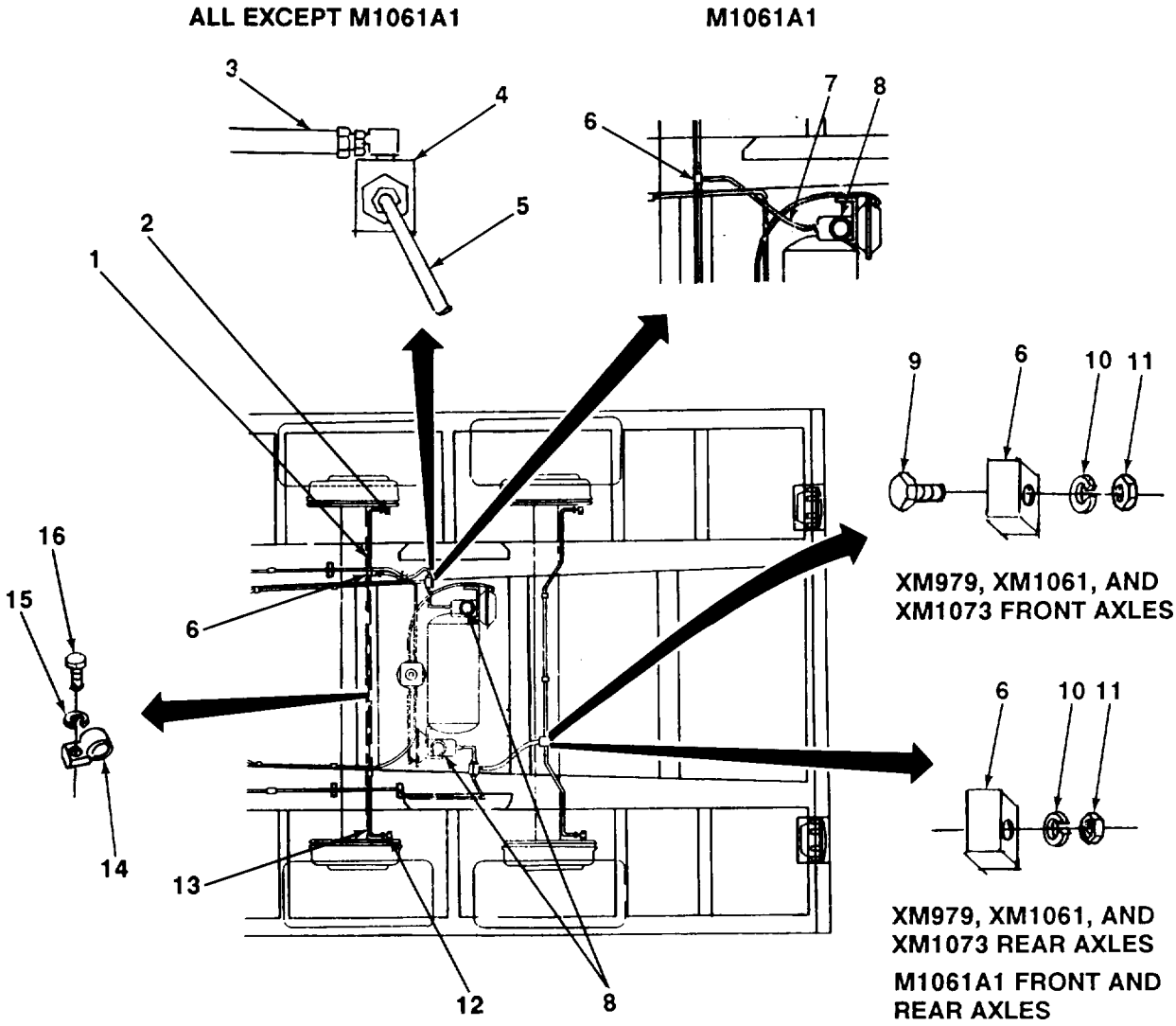

5. On all except M1061A1, connect hose assembly(5) to reducer on master cylinder (8) and fitting on shuttle valve (4).

6. On all except M1061A1, connect hose assembly (3) to fitting on shuttle valve (4) and multiple connector (6) on front axle.

7. Connect tube assembly (1) to multiple connector (2) on backing plate and multiple connector (6) on front axle.

8. Repeat steps 1 through 7 for hoses, tubes, and fittings on rear axle.

FOLLOW-ON TASKS:

- Bleed brakes (para 4-31).

TA700959

4-35. INERTIA BRAKE ACTUATOR AND MASTER CYLINDER ASSEMBLY MAINTENANCE (XM979 AND XM1061).

This Task Covers:

a. Removal
b. Disassembly
c. Cleaning and Inspection
d. Assembly
e. Installation

Initial Setup:

Equipment Conditions:

- Reach tube removed (para 4-48).

Tools/Test Equipment:

- General mechanic's tool kit
- Torque wrench

Materials/Parts:

- Sealing compound (Item 5, Appendix E)
- Dry cleaning solvent (Item 14, Appendix E)
- One. gasket-
- One seal
- Two grease fittings
- Two spring pins
- Four self-locking bolts
- Four sleeves -
- Nine lockwashers

a. REMOVAL

1. Remove eight screws (10) and lockwashers (9). Remove retainer (11) and seal (8) from reach tube (4). Discard . lockwashers and seal.

2. Remove ten screws (7) and flatwashers (6). Ease inertia brake actuator assembly (1) out of reach tube (4).

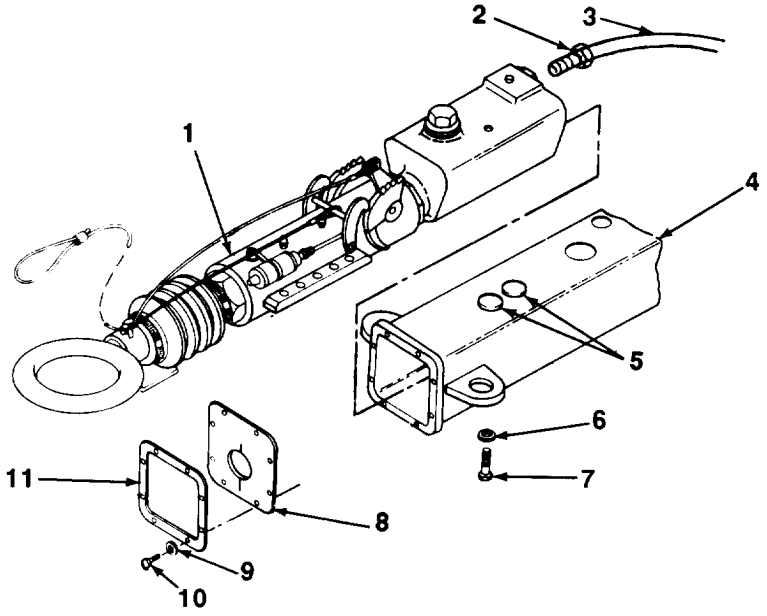

TA700960

4-35. INERTIA BRAKE ACTUATOR AND MASTER CYLINDER ASSEMBLY MAINTENANCE (XM979 AND XM1061) (Con't).

3. Remove connector (2) with tube assembly (3) attached from rear of inertia brake actuator assembly (1).
4. If damaged, remove two plugs (5) from reach tube (4) and discard.

b. DISASSEMBLY

1. Remove sleeve (17), thimble (18), and wire rope (33). Discard sleeve.
2. Remove sleeve (34) from wire rope (33). Discard sleeve.
3. Remove two sleeves (14 and 32) and wire rope (13). Discard sleeves.
4. Remove tube assembly (26), elbow (21), reducer (28), and straight adapter (27).
5. Remove screw (25), lockwasher (29), clamp (30), and accumulator (31). Discard lockwasher.
6. Remove two self-locking bolts (16), pawl (15), and two springs (12). Discard self-locking bolts.
7. Remove two self-locking bolts (20) and lever (19). Discard self-locking bolts.
8. Remove two spring pins (24), flatwashers (23), and pin (22). Discard spring pins.

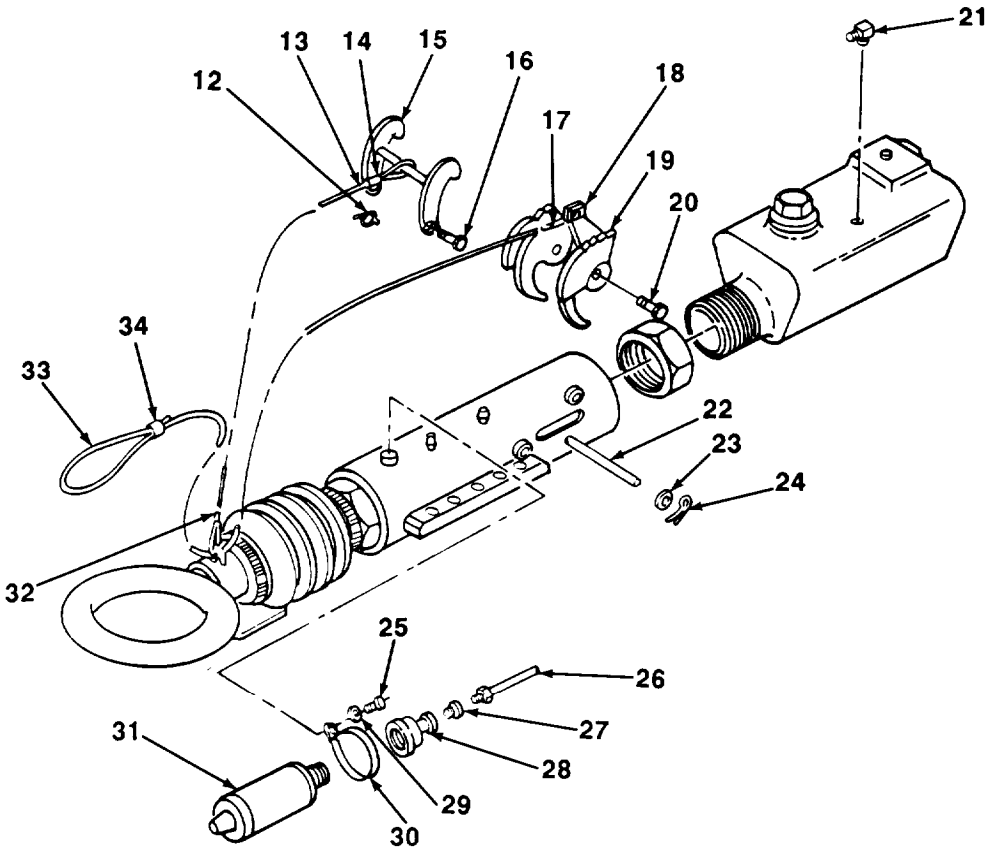

TA700961

4-35. INERTIA BRAKE ACTUATOR AND MASTER CYLINDER ASSEMBLY MAINTENANCE (XM979 AND XM1061) (Con't).

9. Remove two grease fittings (37) from sleeve (42). Discard grease fittings.

10. Remove clamp (36) and brake ring (35).

11. Loosen nut (38) and remove master cylinder (41).

12. Remove plug (40), gasket (39), and nut (38) from master cylinder (41). Discard gasket.

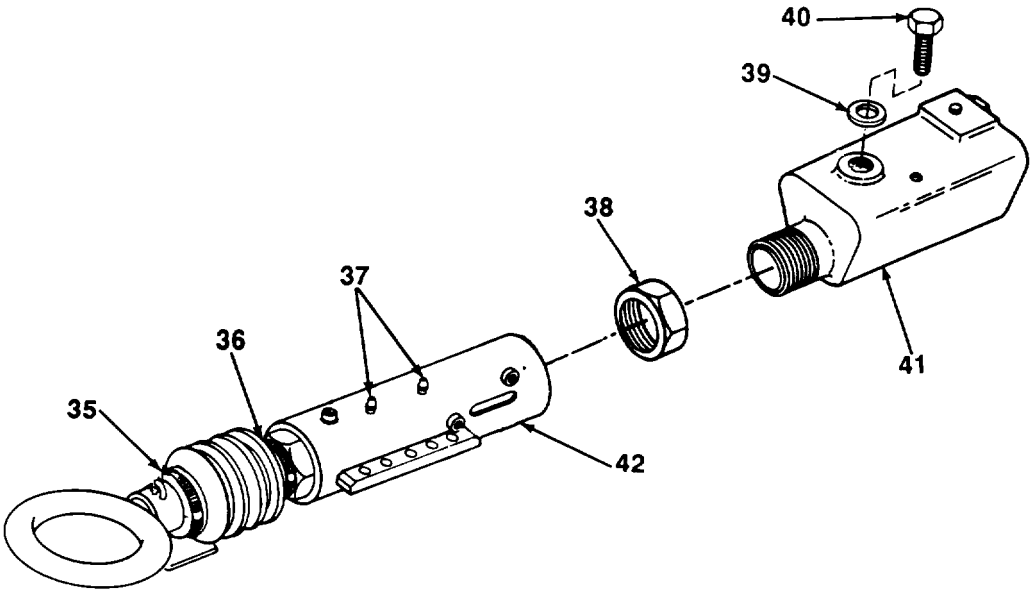

WARNING

Spring is under pressure. Use care when disassembling inertia brake actuator. Failure to follow this warning may result in serious injury to personnel.

13. Back off nut (47) and remove towbar assembly (43) and bellows (44) from sleeve (42).

14. Remove pushrod (46) and spring (45) from sleeve (42).

TA700962

4-35. INERTIA BRAKE ACTUATOR AND MASTER CYLINDER ASSEMBLY MAINTENANCE (XM979 AND XM1061) (Con't).

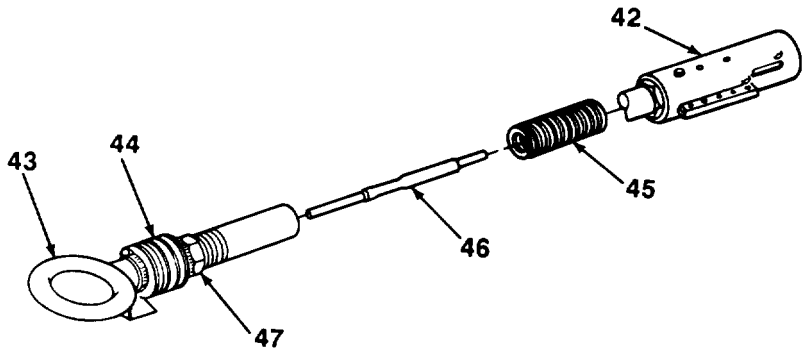

c. CLEANING AND INSPECTION

WARNING

Dry cleaning solvent, P-D-680, is toxic and flammable. Always wear protective goggles and gloves, and use only in a well-ventilated area. Avoid contact with skin, eyes, and clothes, and DO NOT breathe vapors. DO NOT use near open flame or excessive heat. The solvent's flash point is 100°F-138°F (38°C-59°C). If you become dizzy while using cleaning solvent, immediately get fresh air and medical help. If solvent contacts eyes, immediately wash your eyes and get medical aid.

1. Clean all components with dry cleaning solvent and dry thoroughly.
2. Inspect all components for damage. Replace if damaged.

d. ASSEMBLY

1. Install spring (45) and pushrod (46) in sleeve (42),
2. Install towbar assembly (43) and bellows (44) to sleeve (42) and tighten nut (47).
3. Install clamp (36) and brake ring (35).
4. Install nut (38), new gasket (39), and plug (40) on master cylinder (41).
5. Install master cylinder (41) on sleeve (42) and tighten nut (38).
6. Install two new grease fittings (37) on sleeve (42).

TA700963

4-35. INERTIA BRAKE ACTUATOR AND MASTER CYLINDER ASSEMBLY MAINTENANCE (XM979 AND XM1061) (Con't).

7. Install pin (22) with two flatwashers (23) and new spring pins (24).

8. Install lever (19) with two new self-locking bolts (20). Tighten self-locking bolts until lever no longer rotates freely, then loosen in 1/4 turn increments until lever rotates freely again.

9. Install two springs (12), pawl (15), and two new self-locking bolts (16). Tighten self-locking bolts until pawl no longer rotates freely, then loosen in 1/4 turn increments until pawl rotates freely again.

10. Install accumulator (31), clamp (30), new lockwasher (29), and screw (25).

11. Install reducer (28), straight adapter (27), elbow (17), and tube assembly (26).

12. Install wire rope (13) and two new sleeves (14 and 32). Crimp sleeves securely.

13. Attach new sleeve (34) to wire rope (33). Crimp sleeve securely.

14. Install wire rope (33), thimble (18), and new sleeve (17), Crimp sleeve securely.

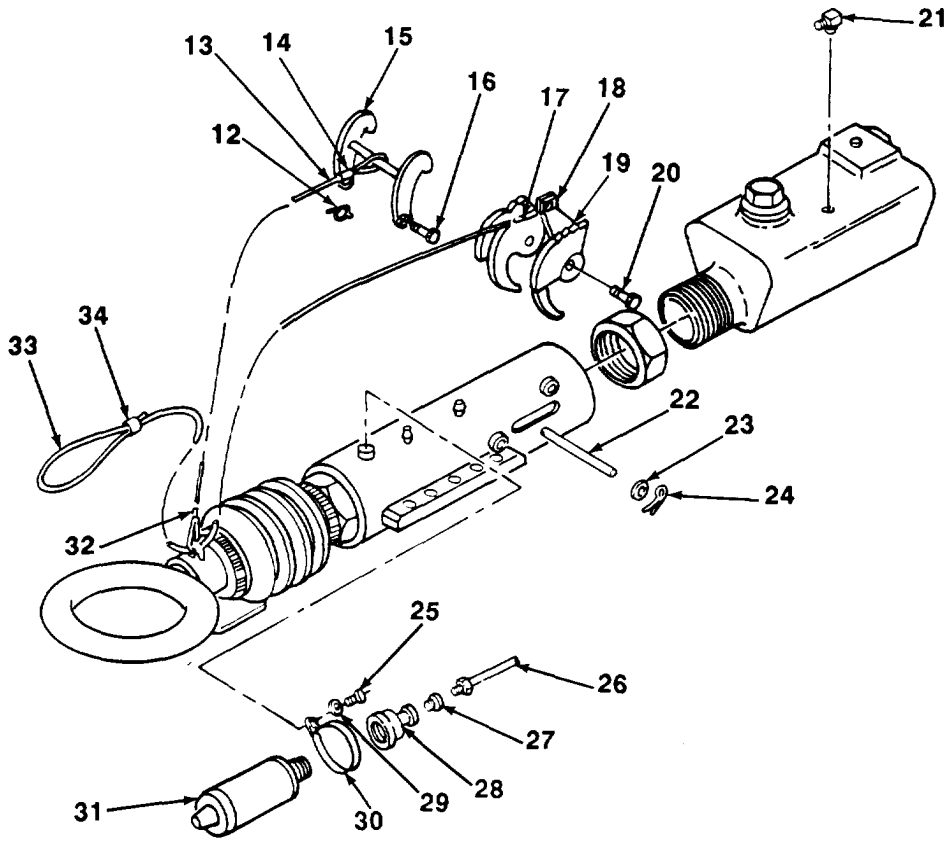

TA700964

4-35. INERTIA BRAKE ACTUATOR AND MASTER CYLINDER ASSEMBLY MAINTENANCE (XM979 AND XM1061) (Con't).

e. INSTALLATION

1. Install connector (2) with tube assembly (3) attached to rear of inertia brake actuator assembly(1).
2. Install retainer (11) and new seal (8) on inertia brake actuator assembly (1) with eight new lockwashers (9) and screws (10).
3. Slide inertia brake actuator assembly (1) into reach tube (4).
4. Install ten flatwashers (6) and screws (7). Apply sealing compound to screws. Torque screws to 190 lb.-ft. (258 N•m).
5. If removed, install two new plugs (5) in reach tube (4).

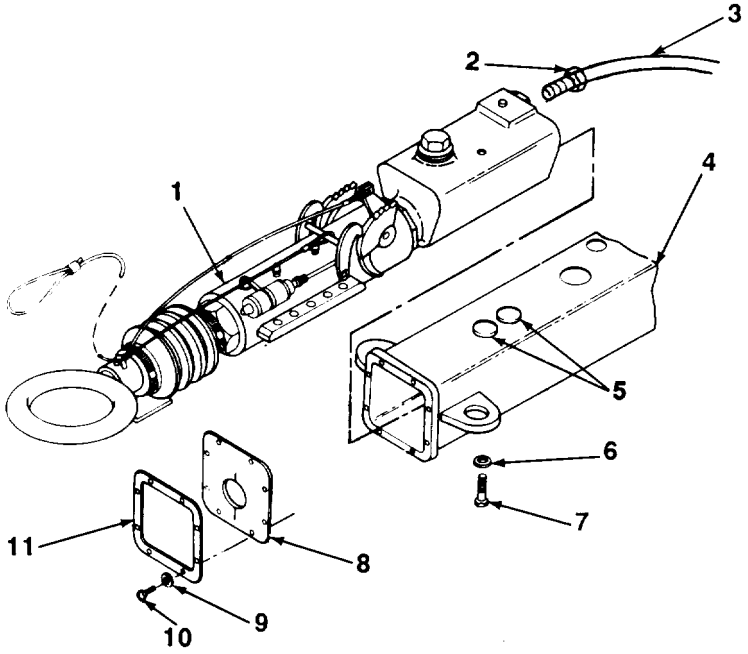

FOLLOW-ON TASKS:

- Install reach tube (para 4-48).
- Lubricate inertia brake actuator and master cylinder (Chapter 3, Section I).

TA700965

4-36. INERTIA BRAKE HYDRAULIC TUBES AND HOSES REPLACEMENT (XM979 AND XM1061).

This Task Covers:

a. Removal

b. Installation

Initial Setup:

Tools/Test Equipment:

- General mechanic's tool kit
- Drain pan

Materials/Parts:

- Rags (Item 12, Appendix E)
- Nine lockwashers

a. REMOVAL.

NOTE

Use a drain pan to catch any draining brake fluid. Clean up all spills

1. If necessary for access, remove reach tube (para 4-48) and inertia brake actuator and master cylinder assembly (para 4-35).
2. Disconnect tube assembly (1) from connector (18).
3. Loosen nut (2) and remove tube assembly (1) from nut (3).
4. Disconnect hose assembly (4) from nut (3). Remove nut from bracket (17).
5. Disconnect hose assembly (4) from multiple connector (15).
6. Disconnect two tube assemblies (9) from multiple connector (15).
7. Remove screw (16), nut (13), lockwasher (1 4), and multiple connector (1 5).
8. Disconnect tube assembly (9) from coupling (10).
9. Remove two screws (5), lockwashers (7), nuts (8), and clamps (6). Remove tube assembly (9). Discard lockwashers.
10. Disconnect tube assembly (11) from shuttle valve (12) and coupling (10).
11. Remove two screws (5), lockwashers (7), nuts (8), and clamps (6). Remove tube assembly (11). Discard lockwashers.
12, Repeat steps 8 through 11 to remove tube assemblies (9 and 11) on other side of trailer.

b. INSTALLATION

1. Position tube assembly (11) on trailer.
2. Connect tube assembly (11) to shuttle valve (1 2).
3. Install coupling (10) to tube assembly (11).
4. Install tube assembly (11) on trailer with two clamps (6), screws (5), new lockwashers (7), and nuts (8).

4-36. INERTIA BRAKE HYDRAULIC TUBES AND HOSES REPLACEMENT (XM979 AND XM1061) (Con't).

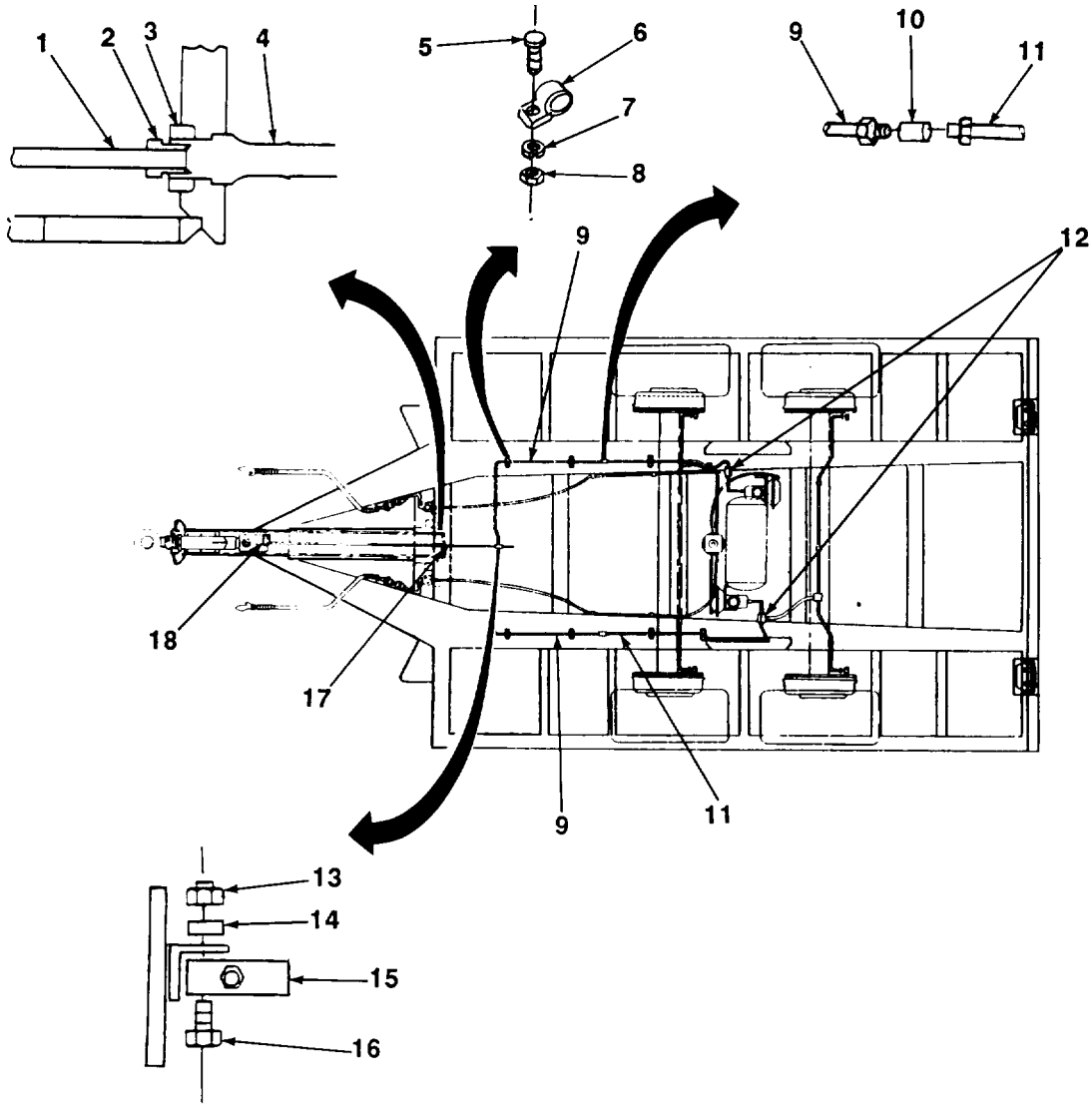

5. Position tube assembly (9) on trailer and connect to coupling (10). Secure tube assembly with two clamps (6), screws (5), new lockwashers (7), and nuts (8).

6. Repeat steps 1 through 5 to install tube assemblies (9 and 11) on other side of trailer.

7. Install multiple connector (15) with screw (16), new lockwasher (14), and nut (13).

8. Connect two tube assemblies (9) to multiple connector (15).

9. Install nut (3) in bracket (17).

TA700966

4-36. INERTIA BRAKE HYDRAULIC TUBES AND HOSES REPLACEMENT (XM979 AND XM1061) (Con't).

10. Install hose assembly (4) on multiple connector (15) and nut (3).
11. Connect tube assembly (1) to nut (3). Tighten nut (2).
12. Connect other end of tube assembly (1) to connector (18).
13. If removed, Install inertia brake actuator and master cylinder assembly (para 4-35) and reach tube (para 4-48).

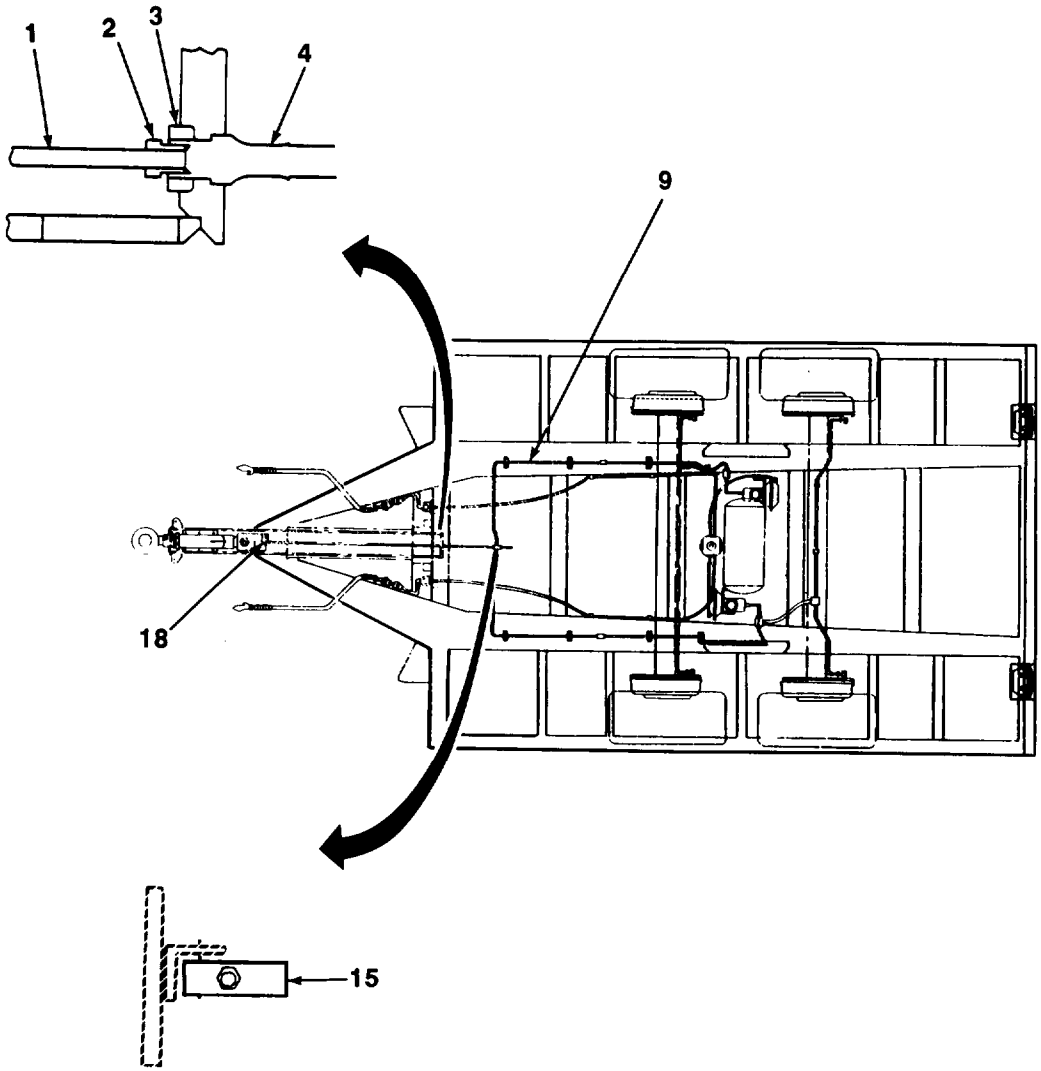

FOLLOW-ON TASKS:

- Bleed brakes (para 4-31).

TA700967

4-37. AIR FILTER MAINTENANCE.

This Task Covers:

	Removal		Assembly
b.	Disassembly	d.	Installation

Initial Setup:

Equipment Conditions:

- Air reservoir pressure drained (para 3-9).

Tools/Test Equipment:

- General mechanic's tool kit

Materials/Parts:

- Detergent item 6, Appendix E)
- Marker tags (Item 16, Appendix E)
- Anti seizing tape (Item 17, Appendix E)
- One gasket
- Two lockwashers

a. REMOVAL

NOTE

To service air filter element, perform subparagraph b.

1. Tag tubes (5 and 11).
2. Loosen nut (3) on straight adapter (2) and disconnect tube (5). Remove insert (4).
3. Remove straight adapter (2) from air filter (1).
4. Disconnect tube (11) from elbow (10). Remove elbow from air filter (1).
5. Remove two nuts (6), lockwashers (7), and U-bolt (9). Remove air filter (1) from bracket (8). Discard lockwashers.

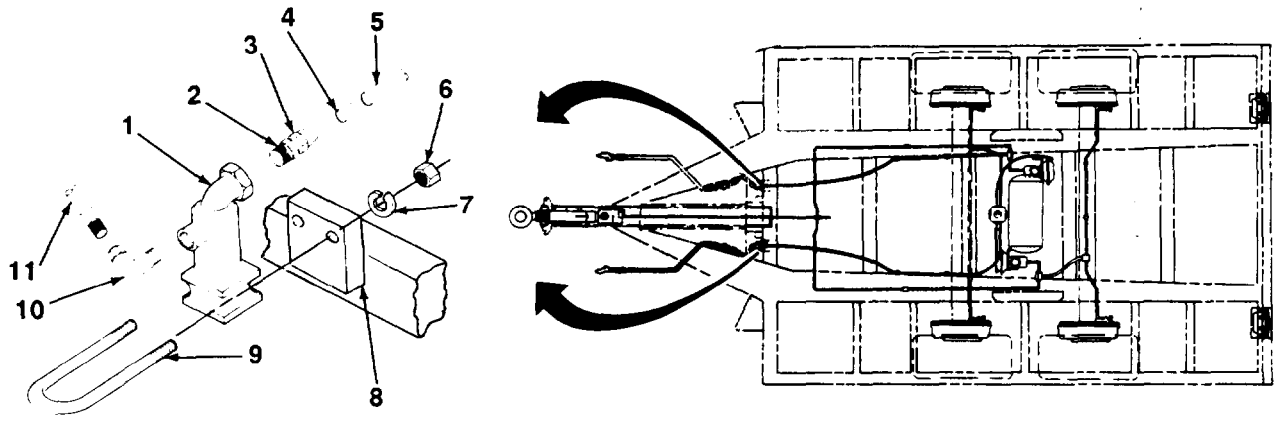

TA700968

4-37. AIR FILTER MAINTENANCE (Con't).

b. DISASSEMBLY

1. Remove plug (17), adapter bushing (16), and gasket (15) from air filter (1). Discard gasket.
2. Remove spring (14), spring tension washer (13), and filter element (12) from air filter (1).

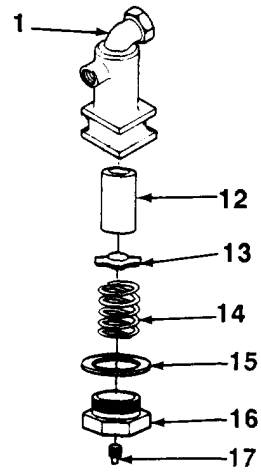

c. ASSEMBLY

NOTE

Apply antiselzing tape to all male threads.

1. Install filter element (12) and spring tension washer (13) in air filter (1).
2. Install spring (14), new gasket (15), adapter bushing (16), and plug (17).

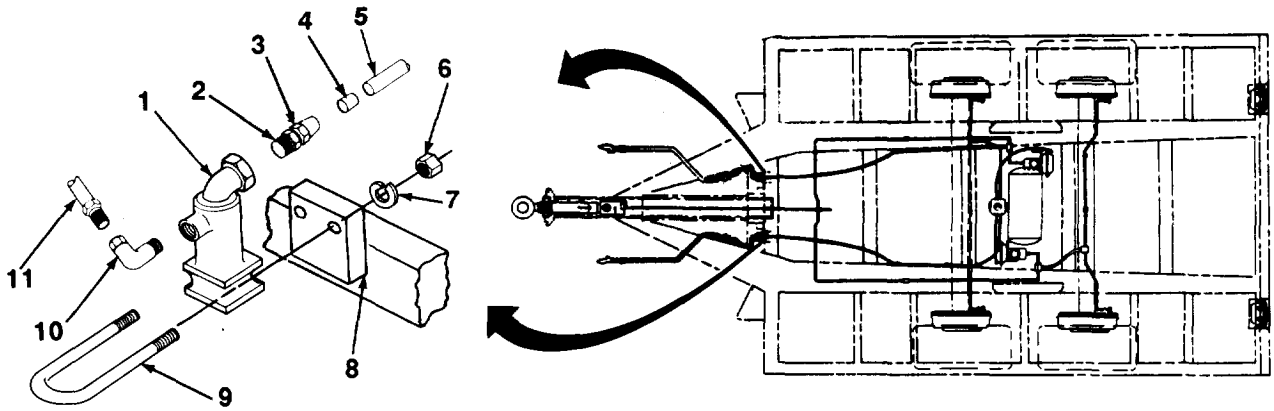

TA700969

4-37. AIR FILTER MAINTENANCE (Con't).

d. INSTALLATION

NOTE

Apply antiseizing tape to all male threads.

1. Install air filter (1) on bracket (8) with U-bolt (9), two nuts (6), and new lockwashers (7).
2. Install elbow (10) in air filter (1).
3. Install straight adapter (2), insert (4), and tube (5) on air filter (1). Tighten nut (3). Remove tag.
4. Connect tube (11) to elbow (10). Remove tag.

FOLLOW-ON TASKS:

- Couple trailer to towing vehicle (para 2-10).
- Use a soap solution to check for leaks. No leaks are permissible.

4-38. AIR COUPLING REPLACEMENT.

This Task Covers:

a. Removal

b. Installation

Initial Setup:

Equipment Conditions:

- Air reservoir pressure drained (para 3-9).

Tools/Test Equipment:

- General mechanic's tool kit

Materials/Parts:

- Detergent (Item 6, Appendix E)
- Anti seizing tape (Item 17, Appendix E)

a. REMOVAL

NOTE

It Is not necessary to remove air coupling to replace preformed packing.

1. Remove air coupling (3) from adapter (2) on hose assembly(1).
2. If damaged, remove preformed packing (4) by prying out with a blunt instrument. Discard preformed packing.

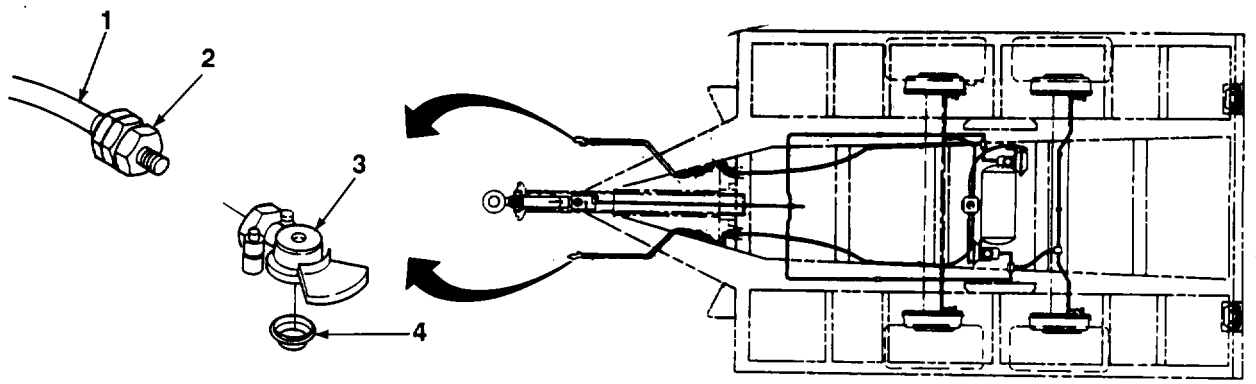

b. INSTALLATION

1. If removed, install new preformed packing(4) using a blunt instrument. Ensure that preformed packing is flat and properly seated in groove of air coupling (3).
2. Apply antiseizing tape to male threads of adapter (2). Install air coupling (3) on adapter on hose assembly(1).

FOLLOW-ON TASKS:

- Couple trailer to towing vehicle (para 2-10).
- Use a soap solution to check for leaks. No leaks are permissible.

TA700970

4-39. AIR LINES, HOSES, AND FITTINGS REPLACEMENT

This Task Covers:

a. Removal

b. Installation

Initial Setup:

Equipment Conditions:

- Air reservoir pressure drained (para 3-9).

Tools/Test Equipment:

- General mechanic's tool kit

Materials/Parts:

- Detergent (Item 6, Appendix E)
- Antiseizing tape (item 17, Appendix E)
- Six lockwashers

NOTE

Illustration shows XM979, XM1061, and M1061A1. XM1073 is similar.

a. REMOVAL

1. if removing hose assembly(1), remove air coupling (para 4-38).
2. Remove hose assembly (1) from coupling (2).
3. Disconnect tube (5) from straight adapter (4).
4. Remove coupling (2), identification plate (3), and straight adapter (4).
5. Remove screw (8), lockwasher (7), and clamp (6) from tube (5). Discard lockwasher.
6. Disconnect tube (5) from elbow at air filter (9) and remove. Remove elbow.

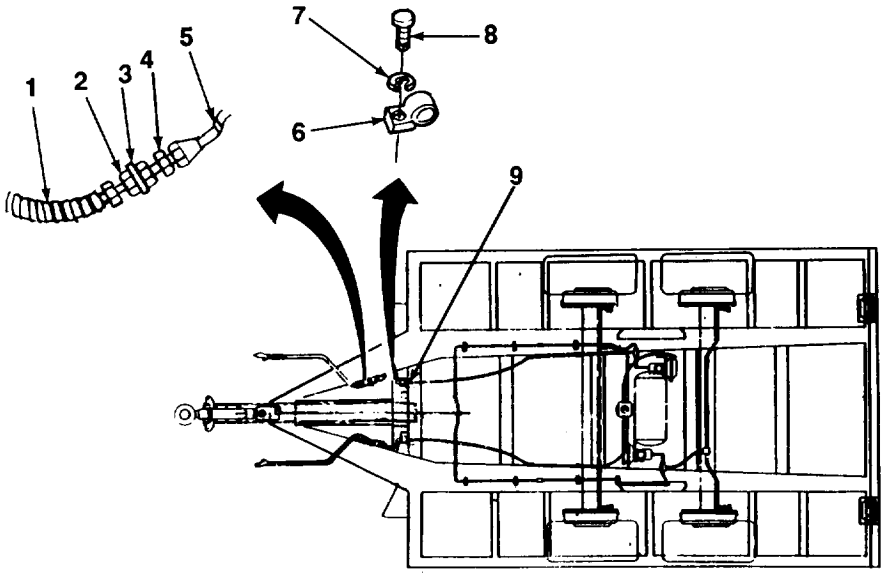

TA700971

4-39. AIR LINES, HOSES, AND FITTINGS REPLACEMENT (Con't).

7. Disconnect tube (16) from straight adapter (17) and remove straight adapter from air filter (9).

8. Remove two screws (8), lockwashers (7), and clamps (6) from tube (16). Discard lockwashers.

9. Disconnect tube (16) from straight adapter (17). Remove straight adapter from relay valve (10).

10. Pull tube (16) through three grommets (15) and remove from trailer.

11. Remove three grommets (15) from frame.

12. Disconnect tube (11) from straight adapter (17). Remove straight adapter from relay valve (10).

13. Disconnect tube (11) from elbow (13) at airbrake chamber (14) and remove.

14. Remove insert (12) and elbow (13) from airbrake chamber (14).

15. Repeat steps 1 through 14 for hose, tubes, and fittings on other side of trailer.

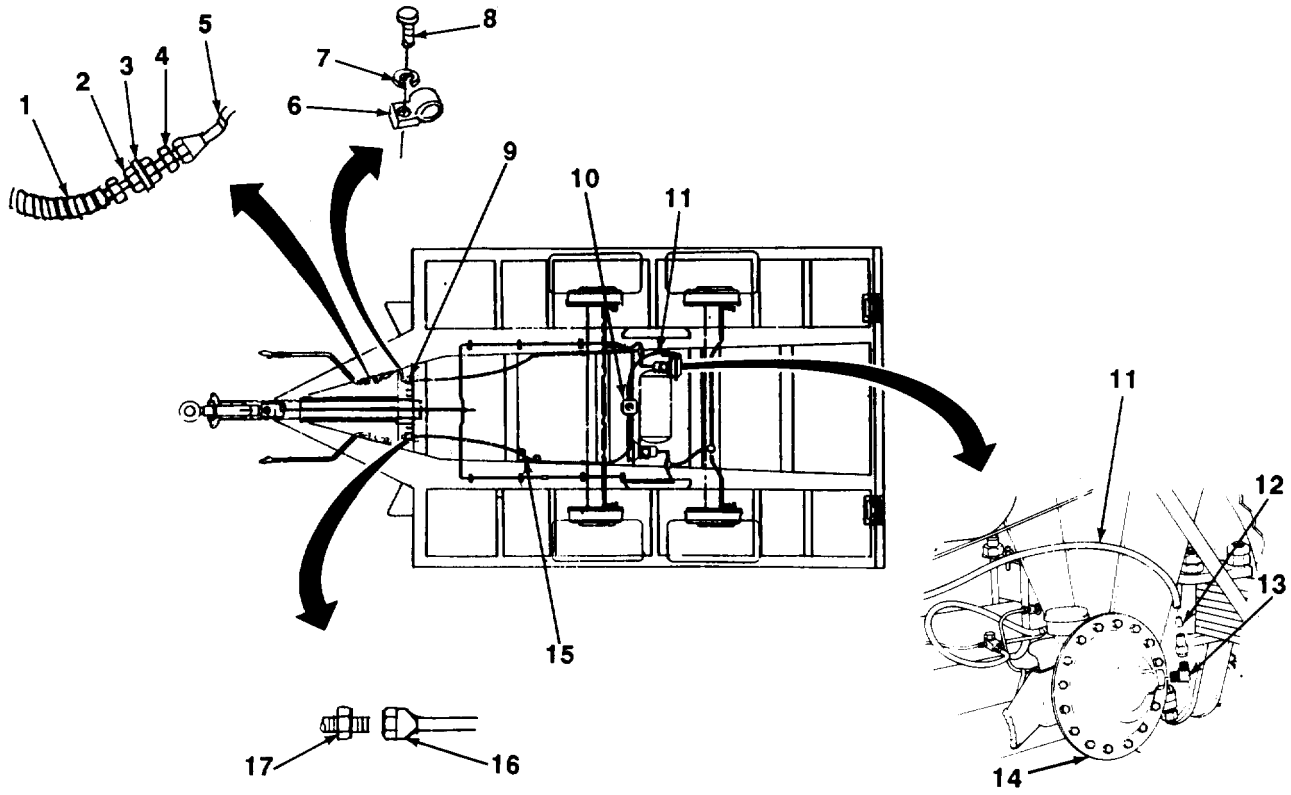

TA700972

4-39. AIR LINES, HOSES, AND FITTINGS REPLACEMENT (Con't).

b. INSTALLATION

NOTE

Apply antiseizing tape to all male threads of fittings.

1. Install insert (12) and elbow (13) in airbrake chamber (14).
2. Connect tube (11) to elbow (13).
3. Install straight adapter (17) in relay valve (10) and connect tube (11) to straight adapter.
4. Install three grommets (15) in frame.
5. Install straight adapter (17) in relay valve (10).
6. Install straight adapter (17) in air filter (9).
7. Position tube (16) through three grommets (15). Connect one end of tube to straight adapter (17) on relay valve (10) and other end to straight adapter (17) on air filter (9).
8. Install two clamps (6) on tube(16) with two screws (8) and new lockwashers (7).
9. Install elbow on air filter (9). Connect tube (5) to elbow.
10. Install straight adapter (4) identification plate (3) and coupling (2) on hose assembly(1).
11. Connect tube (5) to straight adapter (4).
12. Install clamp (6) on tube (5) with screw (8) and new lockwasher (7).
13. If removed, install air coupling (para 4-38).
14. Repeat steps 1 through 13 for hose, tubes, and fittings on other side of trailer.

FOLLOW-ON TASKS:

- Couple trailer to towing vehicle (para 2-10).
- Use a soap solution to check for leaks. No leaks are permissible.

4-40. RELAY VALVE REPLACEMENT.

This Task Covers:

a. Removal

b. Installation

Initial Setup:

Equipment Conditions:

- Air reservoir pressure drained (para 3-9).

Tools/Test Equipment:

- General mechanic's tool kit

Materials/Parts

- Detergent (Item 6, Appendix E)
- Marker tags (Item 16, Appendix E)
- Antiseizing tape (Item 17, Appendix E)
- Three lockwashers

a. REMOVAL

1. Tag four tubes (1).
2. Loosen nut (2) and disconnect tube (1) from straight adapter (3). Repeat for remaining three tubes.
3. Remove four straight adapters (3) from relay valve (4).
4. Remove three nuts (5) and lockwashers (6). Remove relay valve (4) from studs (7) on air reservoir (8). Discard lockwashers.

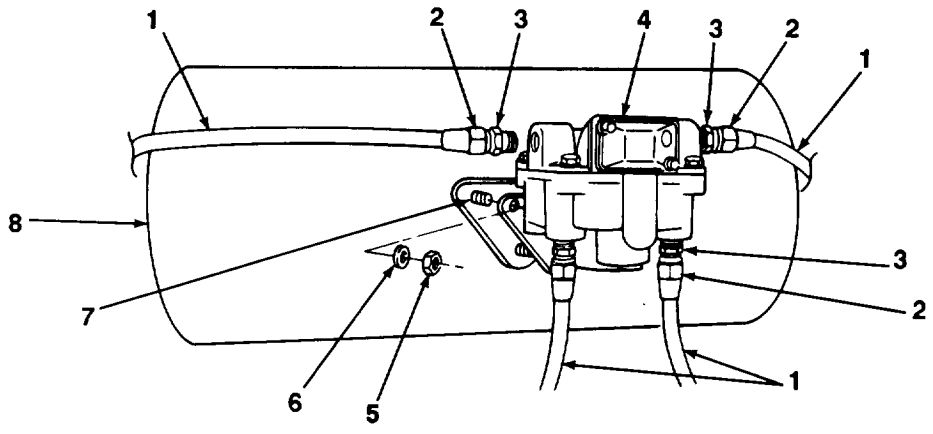

TA700973

4-40. RELAY VALVE REPLACEMENT (Con't).

b. INSTALLATION

1. Install relay valve (4) on studs (7) with three nuts (5) and new lockwashers (6).

NOTE

Apply antiseizing tape to all male threads.

2. Install four straight adapters (3) in relay valve (4).

3. Connect tube (1) to straight adapter (3) and tighten nut (2). Repeat for three remaining tubes. Remove tags.

FOLLOW-ON TASKS:

- Couple trailer to towing vehicle (para 2-10).
- Use a soap solution to check for leaks. No leaks are permissible.

4-41. AIR RESERVOIR AND CABLE REPLACEMENT

This Task Covers:

a. Removal

b. Installation

Initial Setup:

Equipment Conditions:

- Relay valve removed (para 4-40).

Tools/Test Equipment:

- General mechanic's tool kit

Materials/Parts:

- Detergent (Item 6, Appendix E)
- Antiseizing tape (Item 17, Appendix E)
- Four lockwashers

a. REMOVAL

1. Remove clamp (14) and disconnect wire rope (15) from draincock (16).
2. Remove setscrew (12), retainer (13), and spring (11).
3. Slide handle (9) down wire rope (15) to expose ball end (8).
4. Remove ball end (8) and handle (9).
5. Remove wire rope (15) from tube assembly (10).
6. Remove draincock(16) from air reservoir (1).

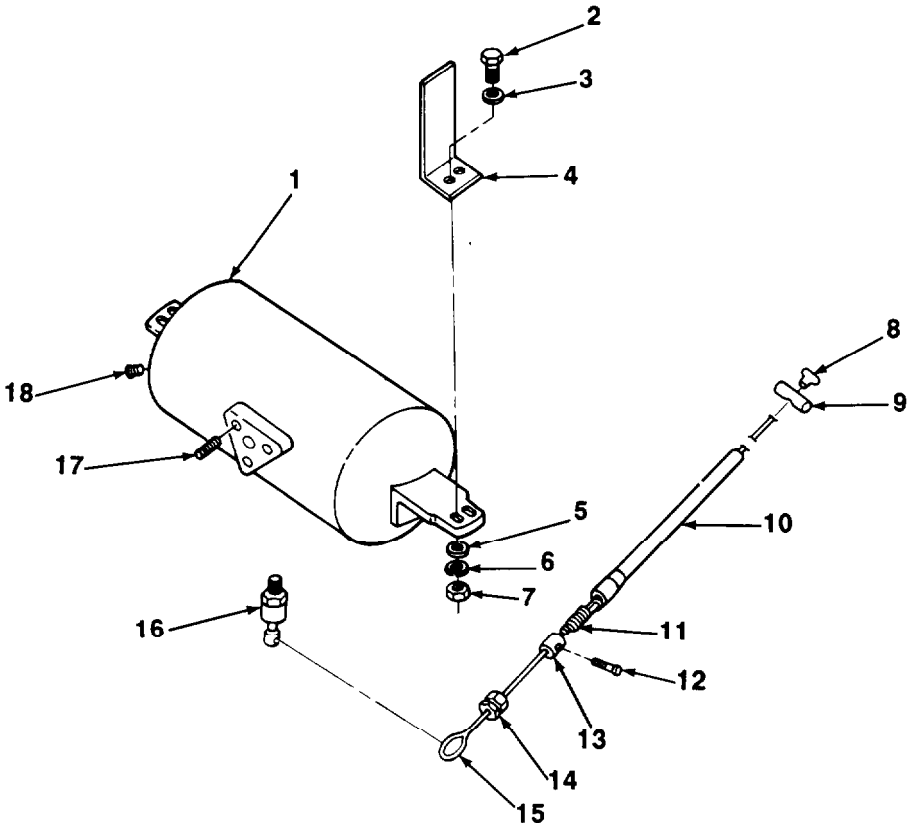

4-41. AIR RESERVOIR AND CABLE REPLACEMENT (Con't).

7. Remove four nuts (7), lockwashers (6), eight flatwashers (3 and 5), and four screws (2). Remove air reservoir (1) from two brackets (4). Discard lockwashers.

8. Remove three studs (17) and plug (18) from air reservoir (1).

b. INSTALLATION

NOTE

Apply antiseizing tape to all male threads.

1. Install plug (18) and three studs (17) in air reservoir (1).

2. Install air reservoir (1) on two brackets(4) with four screws (2), eight flatwashers (3 and 5), four new lockwashers (6), and nuts (7).

3. Install draincock (16) in air reservoir(1).

4. Install wire rope (15) in tube assembly (10). Slide ball end(8) and handle (9) onto wire rope. Firmly crimp ball end and press into handle.

5. Install spring (11) and retainer (13) on wire rope (15). Loosely install setscrew (12) in retainer. Draw wire rope tight and conpress spring so that 5/8 in. (16 mm) is between retainer and end of tube assembly (10). Tighten setscrew.

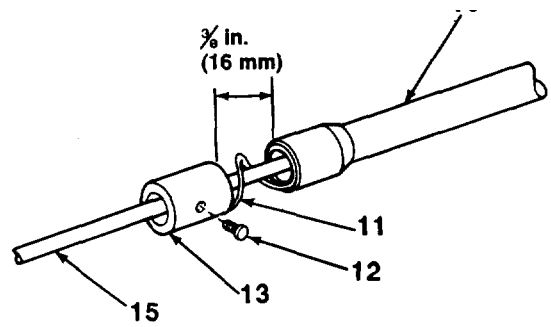

6. Slide clamp (14) onto wire rope (15).

7. Loop wire rope (15) through draincock (16) and secure with clamp (14).

FOLLOW-ON TASKS:

- Install relay valve (para 4-40).
- Couple trailer to towing vehicle (para 2-10).
- Use a soap solution to check for leaks. No leaks are permissible.

TA700975

4-42. AIRBRAKE CHAMBER MAINTENANCE.

This Task Covers:

a. Removal
b. Disassembly
c. Assembly
d. Installation

Initial Setup:

Equipment Conditions:

- Air reservoir pressure drained (para 3-9).

Tools/Test Equipment

- General mechanic's tool kit
- Vise

Materials/Parts:

- Detergent (Item 6, Appendix E)
- Antiseizing tape (Item 17, Appendix E)
- One preformed packing
- Nineteen lockwashers

a. REMOVAL

1. Loosen nut (2) and disconnect tube (1) from elbow (3).
2. Remove elbow (3) from airbrake chamber (4).
3. Remove three nuts (11) and lockwashers (10) from airbrake chamber (4). Discard lockwashers.

CAUTION

Master cylinder must be supported to avoid damaging master cylinder or tubing.

4. Remove airbrake chamber (4) until free of master cylinder (5), using caution not to damage boot (6). Remove collar (7) from rod (8)

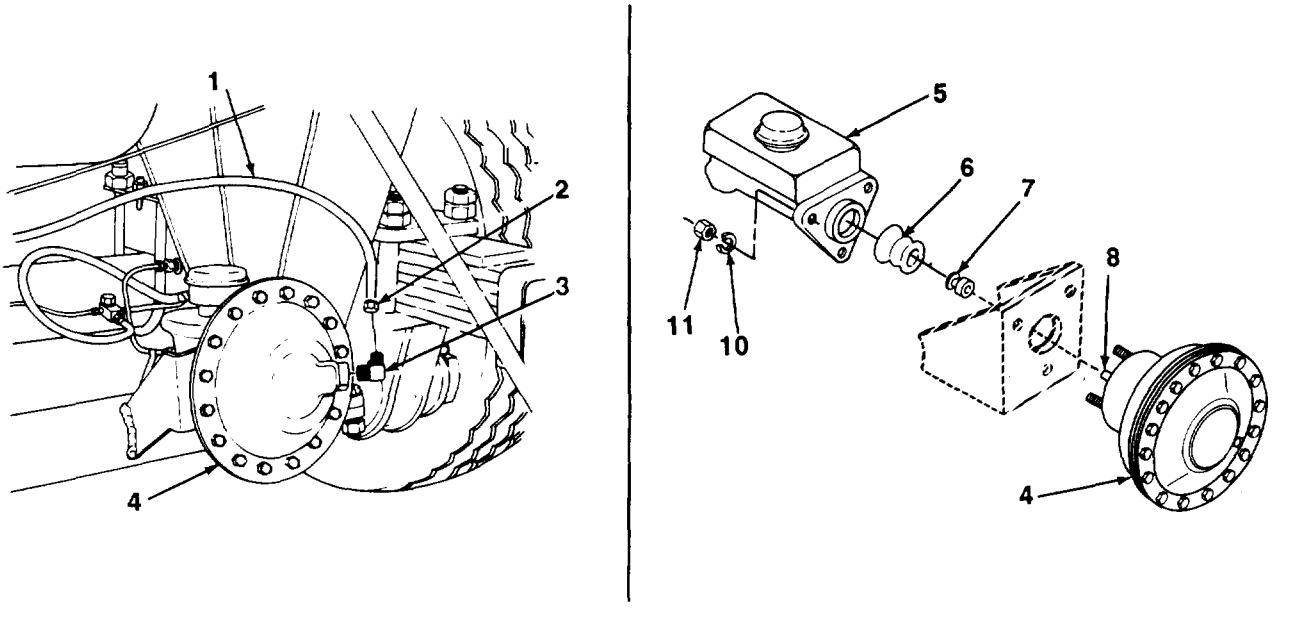

TA700976

4-42. AIRBRAKE CHAMBER MAINTENANCE (Con't).

b. DISASSEMBLY

WARNING

Use caution when disassembling airbrake chamber. Spring inside airbrake chamber is under tension. Failure to follow this warning may cause components to fiy apart, resulting in injury to personnel.

1. Place airbrake chamber (4) in a vise. Remove 16 nuts (12), Iockwashers (13), and screws (17). Discard Iockwashers.
2. Carefully separate diaphragm (15) from body (14). Remove cover (16) and diaphragm together.
3. Carefully remove diaphragm (15) from cover (16).
4. Remove rod (8), retainer (18), and spring (19) from body (14).
5. Remove preformed packing (20) from rod (8). Discard preformed packing.

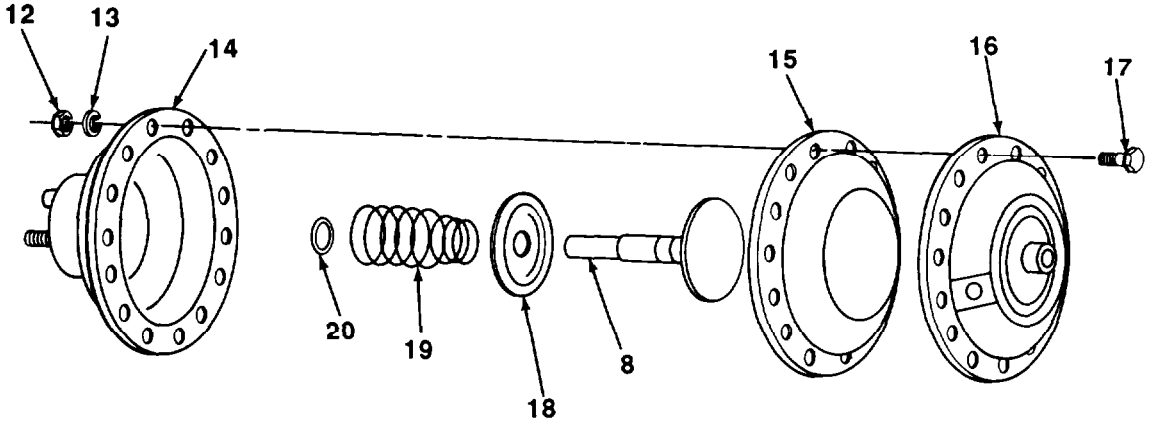

c. ASSEMBLY

1. Install new preformed packing (20), retainer (18), and spring (19) on rod (8).
2. Install rod (8) in body (14).

WARNING

Use caution when assembling airbrake chamber. Spring inside airbrake chamber is under tension. Failure to follow this warning may cause components to fly apart, resulting in injury to personnel.

3. Assemble cover (16), diaphragm (15), and body (14) and place in a vise. Install 16 screws (17), new Iockwashers (13), and nuts (12). Remove from vise.

TA700977

4-42. AIRBRAKE CHAMBER MAINTENANCE (Con't).

d. INSTALLATION

1. Install collar (7) on rod (8). Slide rod onto master cylinder (5). Ensure that collar seats on Preformed Packing inside airbrake chamber to form a moisture-proof seal.

2. Secure airbrake chamber (4) and master cylinder (5) to bracket (9) with three nuts (11) and new lockwashers (10).

NOTE

Apply antiseizing tape to all male threads.

3. Install elbow (3) in airbrake chamber (4).

4. Connect tube (1) to elbow (3) and tighten nut (2).

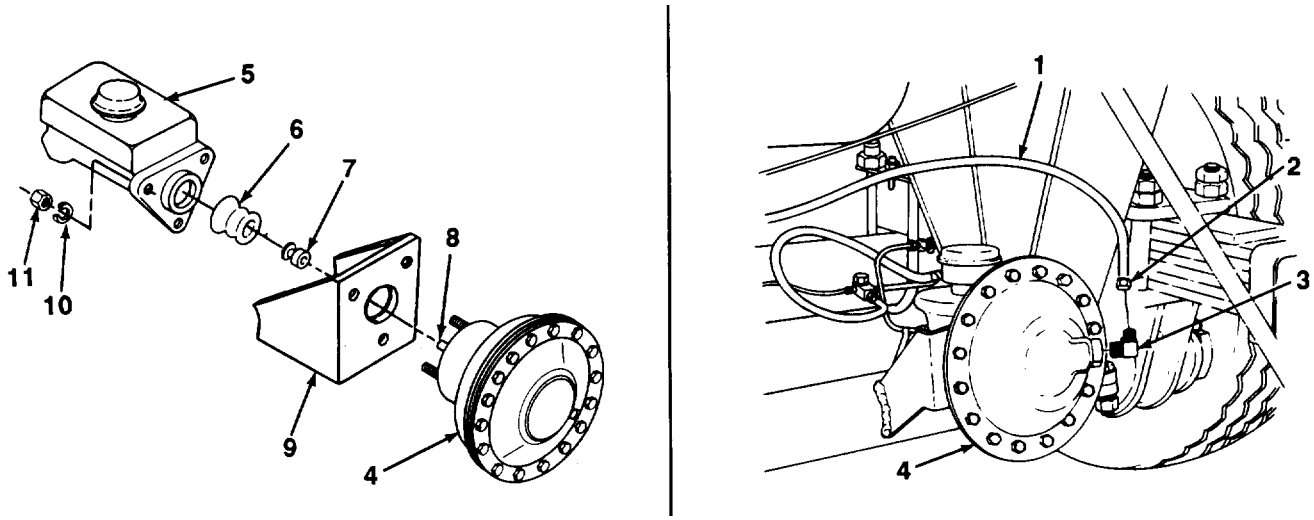

FOLLOW-ON TASKS:

- Couple trailer to towing vehicle (para 2-10)
- Use a soap solution to check for leaks. No leaks are permissible

TA700978

Section VIII. WHEELS, HUBS, AND BRAKEDRUMS MAINTENANCE

Paragraph Title	Page Number
Hub, Brakedrum, and Wheel Bearings Maintenance	4-81
Tire and Wheel Maintenance	4-84
Tire and Wheel Replacement	4-79

4-43. TIRE AND WHEEL REPLACEMENT.

ThisTaskCovers:

a. Removal

b. Installation

Initial Setup:

Tools/TestEquipment

- General mechanic's tool kit
- Floor jack
- Torque wrench

WARNING

Use assistance when lifting tire and wheel. Failure to follow this warning may result in serious injury.

a. REMOVAL

1. Set handbrakes. Block both front and rear tires of opposite side wheels using wheel chocks (1).

NOTE

Nuts on right side of trailer are marked RIGHT Nuts on left side of trailer are marked LEFT.

2. Loosen six nuts (2).

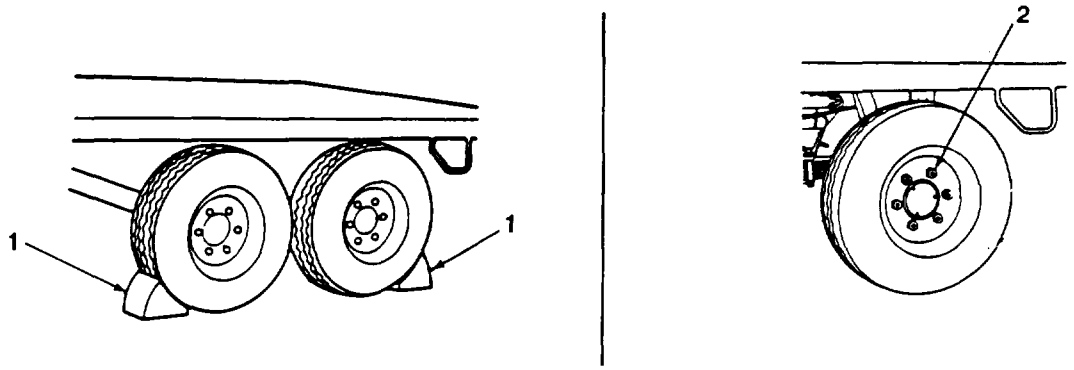

TA700979

4-43. TIRE AND WHEEL REPLACEMENT (Con't).

3. Place jack between two U-bolts of trunnion axle (4) on side where tire and wheel (3) is being removed. Raise trunnion axle until tire and wheel is clear of ground.
4. Remove six nuts (2).
5. Remove tire and wheel (3) from hub.

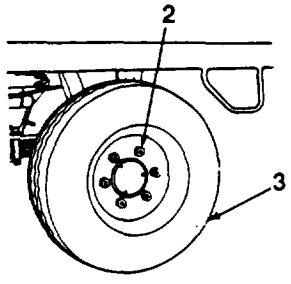

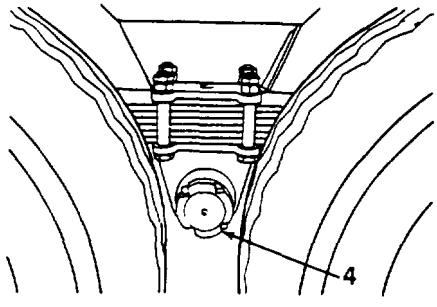

b. INSTALLATION

NOTE

Refer to paragraph 2-14 for spare tire carrier operation.

1. Position wheel and tire (3) on hub.
2. Loosely install six nuts (2).
3. Alternately tighten six nuts (2) in sequence shown until nuts are snug.
4. Lower trunnion axle (4) and remove jack.
5. Torque six nuts (2) to 340-350 lb-ft (454 – 474 N•m) in sequence shown.
6. Remove wheel chocks (1) and stow.

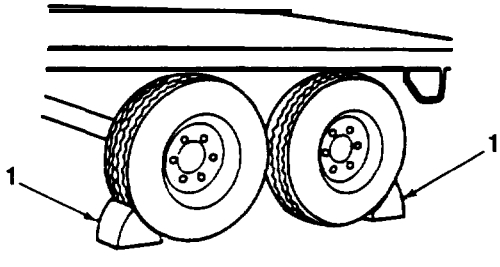

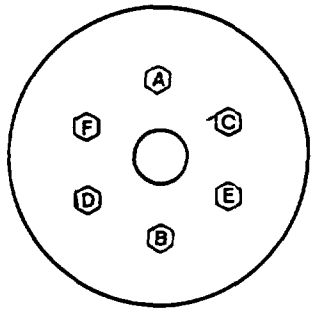

TORQUE SEQUENCE

TA700980

★U.S. GOVERNMENT PRINTING OFFICE 1993-746-01780076

PIN: 064498-001

4-44. HUB, BRAKEDRUM, AND WHEEL BEARINGS MAINTENANCE.

This Task Covers:

a. Removal
b. Disassembly
c. Cleaning and Inspection
d. Assembly
e. Installation
f. Wheel Bearing Adjustment

Initial Setup:

Equipment Conditions:

- Handbrakes released.
- Tire and wheel removed (para 4-43).
- Air reservoir pressure drained (para 3-9).

Tools/Test Equipment:

- General mechanic's tool kit
- Jackstand
- Wheel bearing wrench

References

- TM 9-214

Materials/Parts:

- Grease (Item 8, Appendix E)
- Dry cleaning solvent (Item 14, Appendix E)
- One gasket
- One seal
- Three lockwashers
- Eighteen locknuts

a. REMOVAL

1. Place jackstand under end of axle when hub and brakedrum are to be removed. Remove floor jack.
2. Remove three screws (1) and lockwashers (2), Remove hubcap (3) and gasket (4) from hub (8), Discard lockwashers and gasket.
3. Straighten tab on keywasher (6). Remove nut (5), keywasher (6), and nut (7).

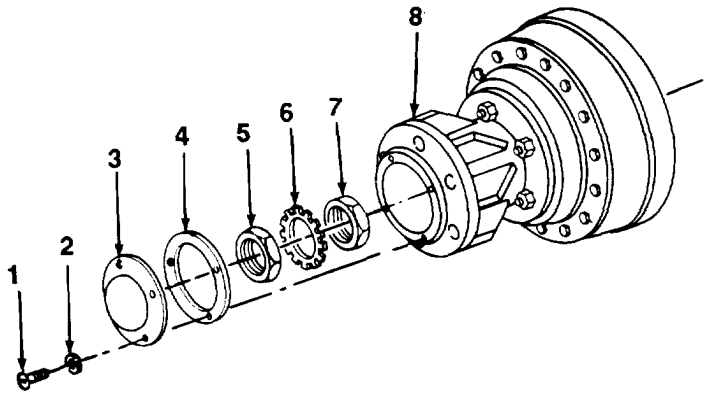

TA700981

4-44. HUB, BRAKEDRUM, AND WHEEL BEARINGS MAINTENANCE (Con't).

4. Remove outer bearing (9).
5. Remove hub (8) and brakedrum (10), inner bearing(11), seal (12), and spacer(13) from axle (14). Discard seal.

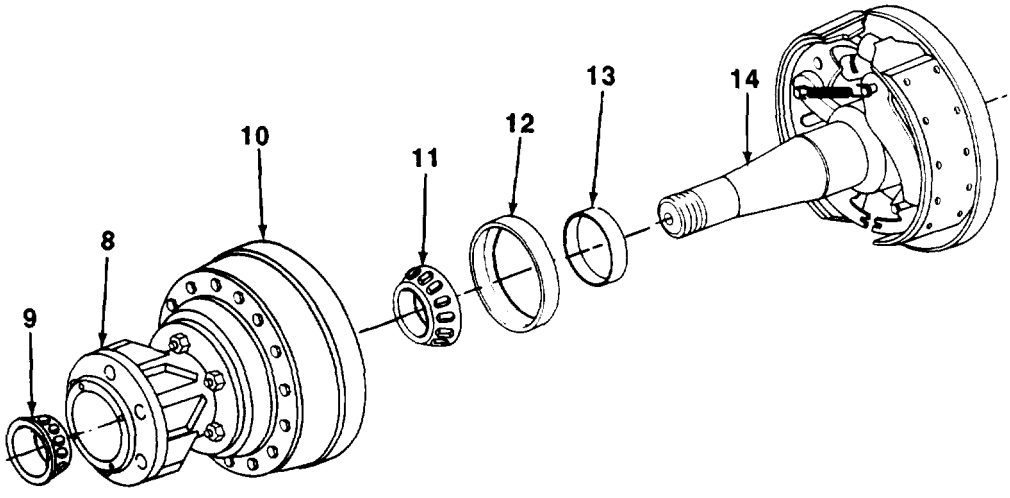

b. DISASSEMBLY

WARNING

DO NOT handle brakeshoes, brakedrums, or other brake components unless area has been properly cleaned. There may be asbestos dust on these components which can be dangerous if you touch it or breathe It. Wear an approved filter mask and gloves. Never use compressed air or a dry brush to clean brake components. Dust may be removed using an industrial-type vacuum cleaner. Clean dust or mud away from brake components with water and a wet, soft brush or cloth. Failure to follow this warning may result in serious illness or death to personnel

1. Remove six nuts (17) and bolts (15). Remove hub (8) from backing plate (16) and brakedrum (10)
2. Remove 18 locknuts (19), flatwashers (20), and bolts (21). Remove backing plate (16) from brakedrum (10). Discard locknuts.
3. If damaged, remove six bolts (18) from hub (8) and discard.

c. CLEANING AND INSPECTION

WARNING

DO NOT handle brakeshoes, brakedrums, or other brake components unless area has been properly cleaned. There may be asbestos dust on these components which can be dangerous if you touch it or breathe it. Wear an approved filter mask and gloves. Never use compressed air or a dry brush to clean brake components. Dust may be removed using an industrial-type vacuum cleaner. Clean dust or mud away from brake components with water and a wet, soft brush or cloth. Failure to follow this warning may result in serious illness or death to personnel

TA700982

4-44. HUB, BRAKEDRUM, AND WHEEL BEARINGS MAINTENANCE (Con't).

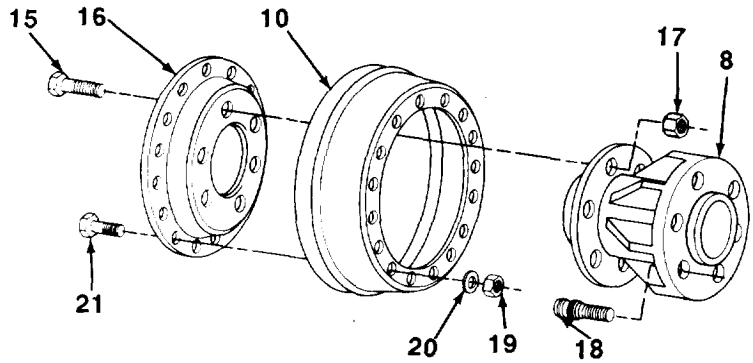

WARNING

Dry cleaning solvent, P-D-680, Is toxic and flammable, Always wear protective goggles and gloves, and use only in a well-ventilated area. Avoid contact with skin, eyes, and clothes, and DO NOT breathe vapors. DO NOT use near open flame or excessive heat. The solvent's flash point is 1OO°F-138°F (38°C-59°C). If you become dizzy while using cleaning solvent, immediately get fresh air and medical help. If solvent contacts eyes, immediately wash your eyes and get medical aid.

1. Clean all removed components with dry cleaning solvent and dry thoroughly.
2. Clean and inspect bearings in accordance with TM 9-214.
3. Visually inspect brakedrum for out-of-round, heat checking, scoring, and cracks. Replace if damaged.
4. Replace all damaged components

d. ASSEMBLY

1, If removed, install six new bolts (18) in hub (8).
2. Install backing plate (16) on brakedrum (10) with 18 bolts (21), flatwashers (20), and new locknuts (19).
3. Install hub (8) on brakedrum (10) and backing plate (16) with six bolts (15) and nuts (17).

e. INSTALLATION

NOTE

Pack bearings with grease In accordance with TM 9-214.

1. Install spacer (13) on axle (14).
2. Install inner bearing (11) and new seal (12) in hub (8).
3. Install hub (8) and brakedrum (10) on axle (14).
4. Install outer bearing (9) on hub (8) and axle (14).

TA700983

4-44. HUB, BRAKEDRUM, AND WHEEL BEARINGS MAINTENANCE (Con't).

f. WHEEL BEARING ADJUSTMENT

1. Install nut (7). Fully tighten nut while rotating hub (8) in both directions until hub will not move with hand pressure. Back off nut 1/4 turn and install keywasher (6) and nut (5). Bend one tab on keywasher over nut (5).

2. Install new gasket (4) and hubcap (3) on hub (8) with three screws (1) and new lockwashers (2).

3. Place floor jack under end of axle and remove jackstand.

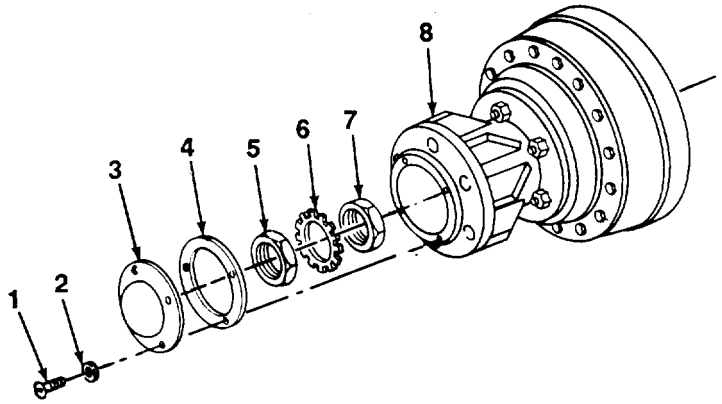

FOLLOW-ON TASKS:

- Install tire and wheel (para 4-43).
- Apply handbrakes.

4-45. TIRE AND WHEEL MAINTENANCE.

Refer to TM 9-2610-200-14 for tire and wheel maintenance procedures.

TA700984

Section IX. FRAME AND TOWING ATTACHMENTS MAINTENANCE

Paragraph Title	Page Number
Leveling Jack Maintenance	4-94
Reach Tube Replacement	4-87
Spare Tire Carrier Maintenance	4-91
Step Plate Replacement (XM979, XM1061 ,and M1061A1),	4-85
Wire Rope Assembly and Shackle Replacement (XM979 and XM1061)	4-86

4-46. STEP PLATE REPLACEMENT (XM979, XM1061, AND M1061A1).

This Task Covers:

a. Removal

b. Installation

Initial Setup:

Materials/Parts:

- Four lockwashers

Tools/Test Equipment:

- General mechanic's tool kit

a. REMOVAL

Remove four screws (2), lockwashers (3), and step plate (1). Discard lockwashers.

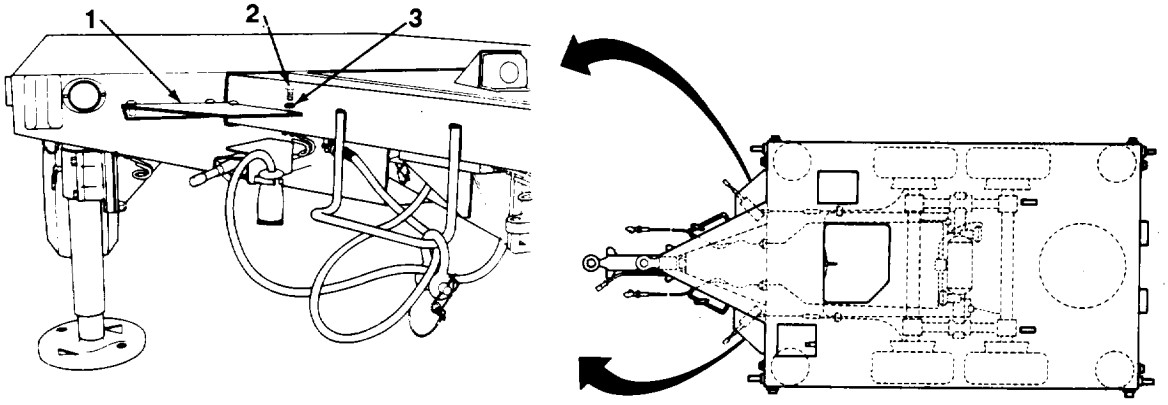

b. INSTALLATION

Install step plate (1) with four screws (2) and new lockwashers (3).

TA700985

4-47. WIRE ROPE ASSEMBLY AND SHACKLE REPLACEMENT (XM979 AND XM1061).

This Task Covers:

a. Removal

b. Installation

Initial Setup:

Tools/Test Equipment

- General mechanic's tool kit

a. REMOVAL

Remove two retaining pins (3), S-hooks (2), wire rope assembly (1), pin (4), and shackle (5) from trailer.

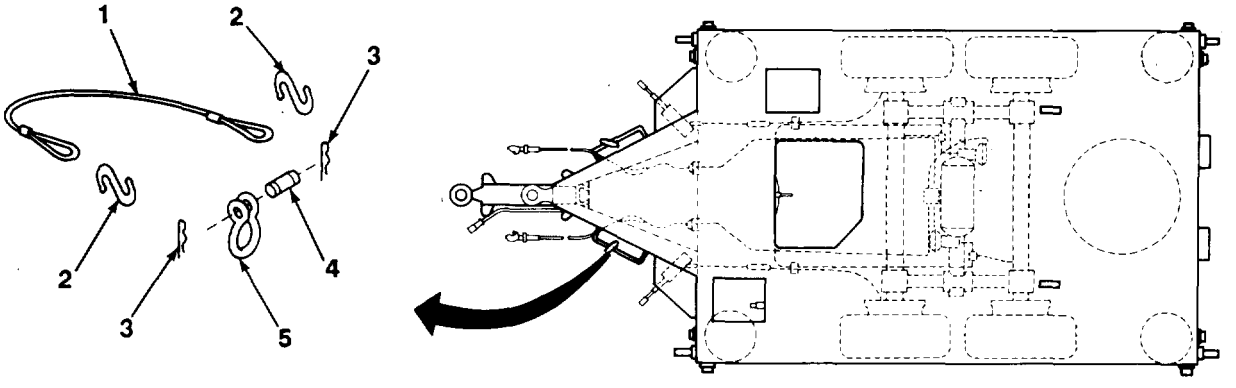

TA700986

b. INSTALLATION

Install shackle (5) on trailer with pin (4), wire rope assembly (1), two S-hooks (2), and retaining pins (3).

4-48. REACH TUBE REPLACEMENT.

This Task Cover:

a. Removal

b. Installation

Initial Setup;

Equipment Conditions:

- Air reservoir pressure drained (para 3-9).

Tools/Test Equipment:

- General mechanic's tool kit
- Drain pan
- Torque wrench

Materials/Parts:

- Rags (Item 12, Appendix E)
- Two lockwashers
- Two locknuts
- Two self-locking nuts

Personnel Required: Three

WARNING

Reach tube is heavy and awkward to handle. Use caution, provide adequate support, and use assistance when replacing reach tube. Failure to follow this warning may result in serious injury or death.

a. REMOVAL

NOTE

- **Reach tube should be fully retracted for steps 1 through 6 of this procedure.**
- **Use a drain pan to catch any draining brake fluid. Clean up all spills.**

1. On XM979 and XM1061, use access hole(5) on reach tube (3) to gain access to tubes. Hold hose assembly(4) firmly and loosen tube assembly nut (1). Remove nut (2) holding hose assembly in place.
2. Pull tube assembly nut (1) free and remove end of hose assembly (4) from reach tube (3).

TA700987

4-48. REACH TUBE REPLACEMENT (Con't).

3. Remove two locknuts (15), screws (13), and bar (14). Discard locknuts.

4. Remove two screws (10), lockwashers (11), and stop (12). Discard lockwashers.

NOTE

On M1061A1, shackles are mounted to reach tube with screws and self-locking nuts.
On all other model trailers, shackles are mounted with screw-type pins.

5. Remove two self-locking nuts (21) and screws (20) or screw-type pins, shackles (19), and chain assemblies (18) from reach tube (3). Discard self-locking nuts.

6. Remove retaining pin (7), wire rope (9), and two S-hooks (8) from pin (6).

7. Remove pin (6), wire rope (16) and two S-hooks (17) from reach tube (3).

8. Slide reach tube (3) forward and remove.

9. If required, remove inertia brake actuator and master cylinder assembly from reach tube (para 4-35).

b. INSTALLATION

1. If removed, install inertia brake actuator and master cylinder assembly in reach tube (para 4-35).

2. Slide reach tube (3) into position.

3. Instail pin (6), two S-hooks (17), and wire rope (16) in reach tube (3).

4. Install retaining pin (7), two S-hooks (8), and wire rope (9) to pin (6).

NOTE

On M1061A1, shackles are mounted to reach tube with screws and self-locking nuts.
On all other model trailers, shackles are mounted with screw-type pins.

5. Install two chain assemblies(18) and shackles(19) on reach tube (3) with two screws (20) and new self-locking nuts (21) or screw-type pins.

6. Install stop (12) with two screws (10) and new lockwashers (11). Torque screws to 21-31 lb.-ft. (28-42 N•m).

7. Install bar (14) with two screws (13) and new locknuts (15).

8. Adjust sliding fit by tightening locknuts (15) equally until reach tube (3) will no longer slide freely, then back off both locknuts approximately 1/4 turn. Ensure that reach tube now slides freely. If reach tube does not slide freely, continue backing off locknuts. Threads on screws (13) must protrude beyond locknuts.

4-48. REACH TUBE REPLACEMENT (Con't).

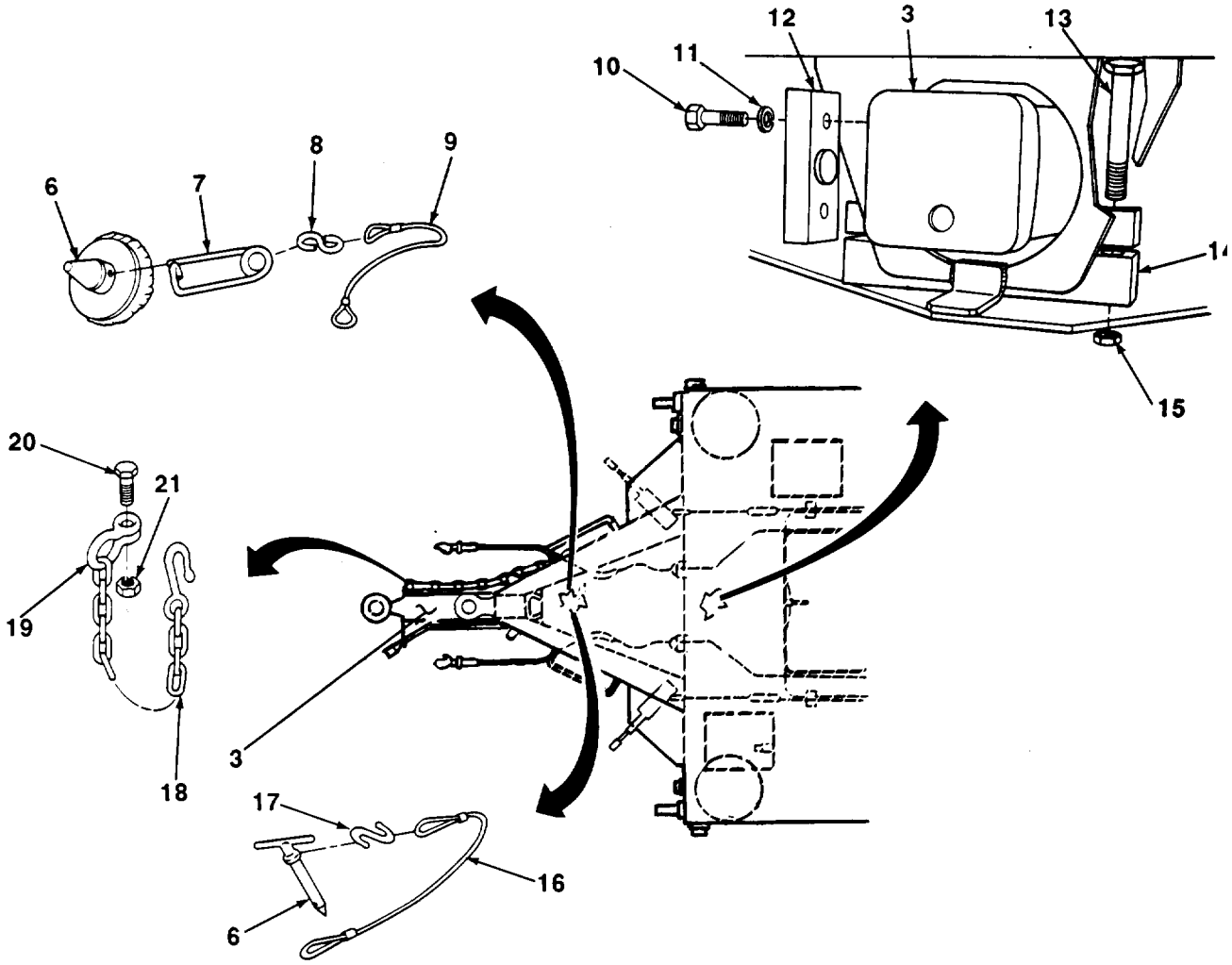

TA700988

4-48. REACH TUBE REPLACEMENT (Con't).

NOTE

Reach tube must be fully retracted for steps 9 and 10.

9. Insert end of hose assembly (4) into reach tube (3).

10. Using access hole (5) on reach tube (3) to gain access to tubes, tighten nut (2) to hold hose assembly (4) in place. Thread tube assembly nut (1) Into hose assembly.

FRONT OF TRAILER

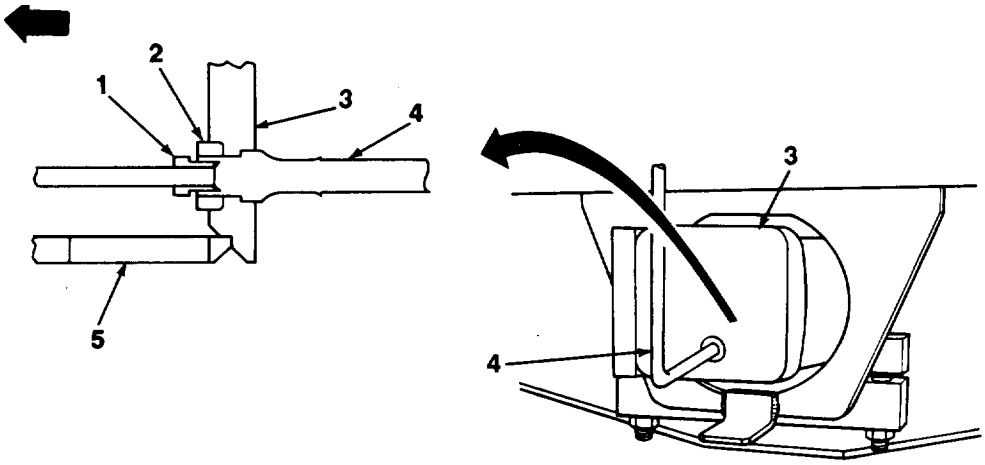

FOLLOW-ON TASKS:

- Bleed brakes (para 4-31).
- Lubricate reach tube (Chapter 3, Section I).

TA700989

4-49. SPARE TIRE CARRIER MAINTENANCE.

This Task Covers:

a. Disassembly

b. Assembly

Initial Setup:

Equipment Conditions:

- Spare tire removed (para 2-14).

Tools/Test Equipment:

- General mechanic's tool kit

Materials/Parts:

- One cotter pin
- One lockwasher (XM1073)

a DISASSEMBLY

1. Remove handcrank (7) from stowed position.
2. If damaged, remove bolt (6), washer (5), spring (4), and latch (3) from frame.
3. Unhook spring (1) from pawl (2) and frame.

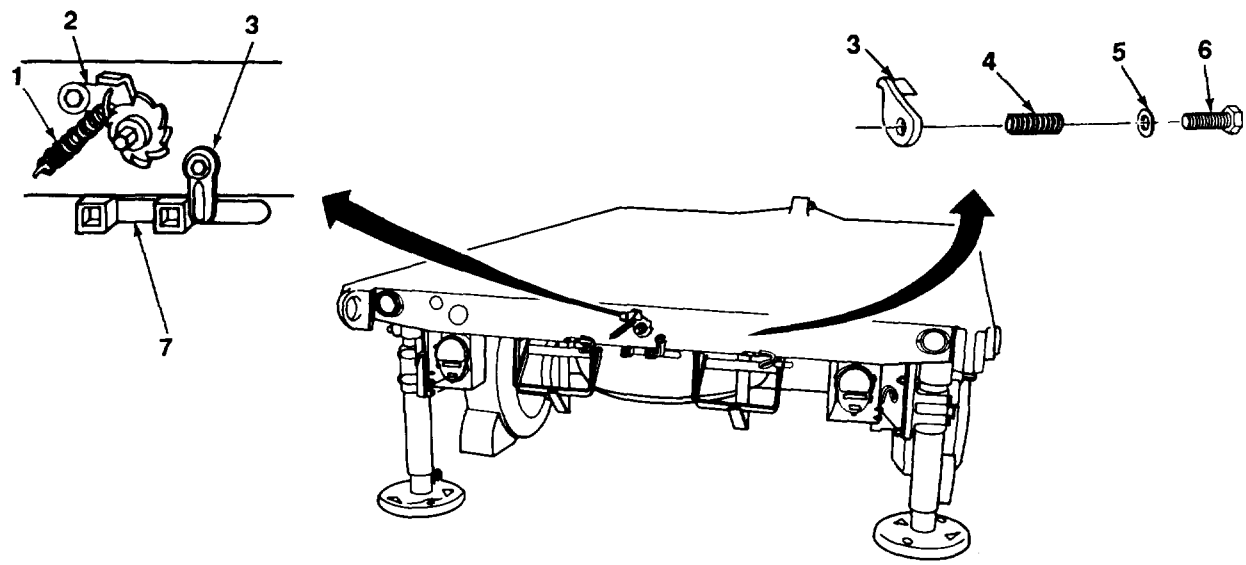

TA700990

4-49. SPARE TIRE CARRIER MAINTENANCE (Con't).

4. Remove bolt (19), pawl (2), and two flatwashers (20) from frame.

5. Remove two nuts (23) and U-bolt (15). Remove wire rope (12) from shaft (16).

6. Remove two nuts (24) and clamp (25) from mounting bracket (26). Pull wire rope (12) from mounting bracket.

7. Remove cotter pin (8) and two flatwashers (9) from shaft (16). Discard cotter pin.

8. Turn shaft(16) to provide access to two setscrews(11 and 14). Remove two setscrews from collars (10 and 13). On XM1073, remove nut (21), lockwasher (22), and screw (18) from flange (17). Discard lockwasher.

9. From rear of trailer, pull shaft(16) at ratchet end out. Collars (10 and 13) and flange (17) (XM1 073) will slide off as shaft is removed.

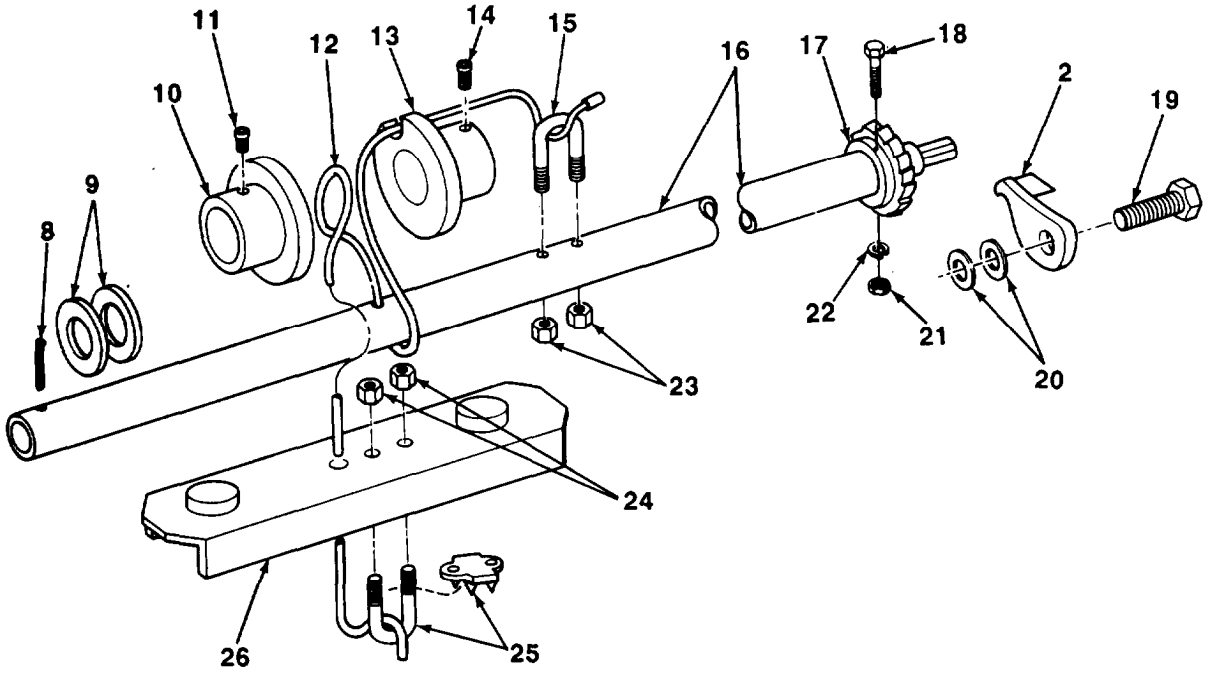

b. ASSEMBLY

1. From rear of trailer, install shaft (16) halfway.

2. Slide two collars (13 and 10) and flange (17) (XM1073) onto shaft (16).

TA700991

4-49. SPARE TIRE CARRIER MAINTENANCE (Con't).

3. Slide shaft (16) completely in and through frame. Install two flatwashers (9) and new cotter pin (8).
4. Position collars (10 and 13) and install setscrews(11 and 14). On XM 1073, install screw (18), new lockwasher (22), and nut (21) to secure flange (17).
5. Thread wire rope (12) through hole in shaft (16) and groove in collar (13).
6. Install U-bolt (15) through shaft (16), over end of wire rope (12), with two nuts (23).
7. Thread other end of wire rope (12) through mounting bracket (26) and clamp (25). Install clamp with two nuts (24).
8. Install two flatwashers (20) and pawl (2) with bolt (19).
9. Hook spring (1) to pawl (2) and frame.
10. If removed, install latch (3) and spring (4) with washer (5) and bolt (6).
11. Return handcrank (7) to stowed position.

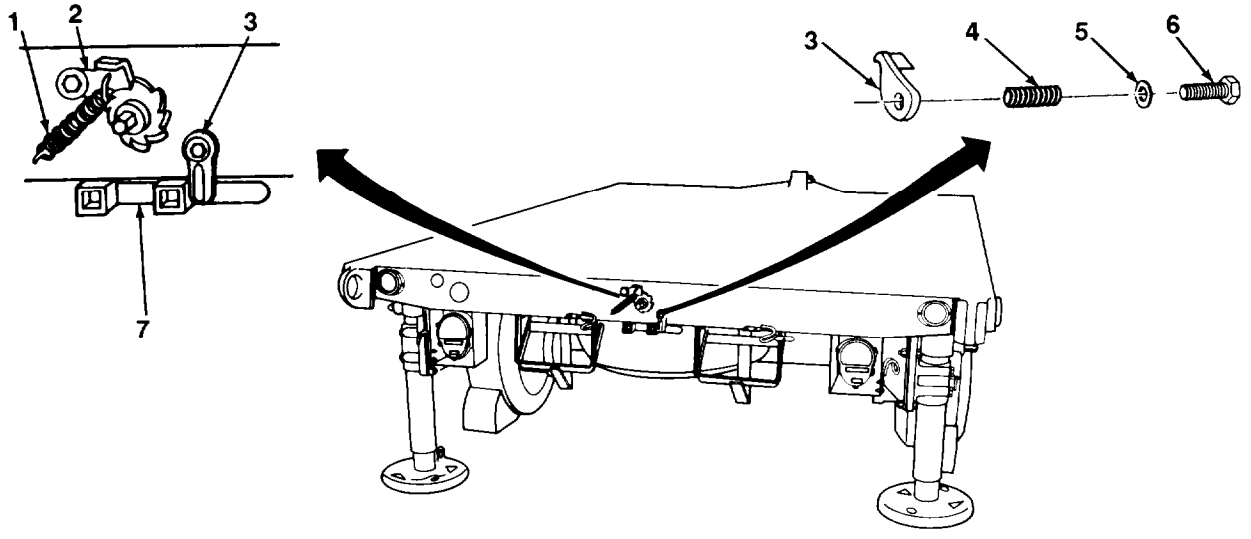

FOLLOW-ON TASKS:

- Lubricate spare tire carrier (Chapter 3, Section I).
- Stow spare tire (para 2-14).

TA700992

4-50. LEVELING JACK MAINTENANCE.

This Task Covers:

a. Removal
b. Disassembly
c. Assembly
d. Installation

Initial Setup:

Equipment Conditions:

- Trailer blocked (para 4-17).

Tools/Test Equipment:

- General mechanic's tool kit
- Jackstand
- Torque wrench

Materials/Parts:

- One gasket
- Five locknuts

a. REMOVAL

1. Remove handcrank (1) from stowed position.
2. If damaged, remove bolt (2), washer (3), spring (4), and latch (5) from frame (7).
3. Place a jackstand under corner of frame (7) where leveling jack (6) is to be removed.
4. Lower leveling jack (6) until plate (11) is just touching ground (para 2-13). Do not allow leveling jack to support any of the trailer weight.
5. Remove four locknuts (9) and screws (10). Remove leveling jack (6) and gasket (8) from frame (7). Discard locknuts and gasket.

TA700993

4-50. LEVELING JACK MAINTENANCE (Con't).

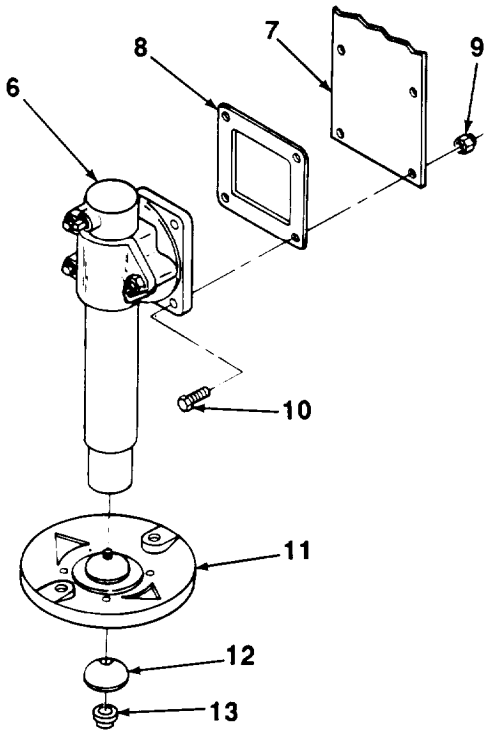

b. DISASSEMBLY

Remove locknut (13), retainer (12), and plate (11) from leveling jack (6). Discard locknut.

c. ASSEMBLY

Install plate (11) on leveling jack (6) with retainer (12) and new locknut (13).

d. INSTALLATION

1. Install new gasket (8) and leveling jack (6) on frame (7) with four screws (10) and new locknuts (9). Torque locknuts to 45-55 lb.-ft. (61-75 N•m).
2. Raise leveling jack (6) (para 2-13).
3. If removed, install latch (5) and spring (4) on frame (7) with washer (3) and bolt (2).
4. Return handcrank (1) to stowed position.
5. Remove jackstand from corner of frame (7).

FOLLOW-ON TASKS:

- Remove blocking (para 4-17).

TA700994

Section X. SPRING ASSEMBLY MAINTENANCE

4-51. SPRING BUMPER AND BUMPER PAD REPLACEMENT.

This Task Covers:

a. Removal

b. Installation

Initail Setup:

Materials/Parts:

- Two locknuts (XM1073)

Tools/Test Equipment:

- General mechanic's tool kit

a. REMOVAL

1. On XM1073, remove two locknuts (1), screws (4), and flatwashers (3). Remove bumper pad (2). Discard locknuts.
2. On M1061A1, remove two screws (4), flatwashers (3), and bumper pad (2).
3. On XM979 and XM1061, remove nut (5) and spring bumper (6).

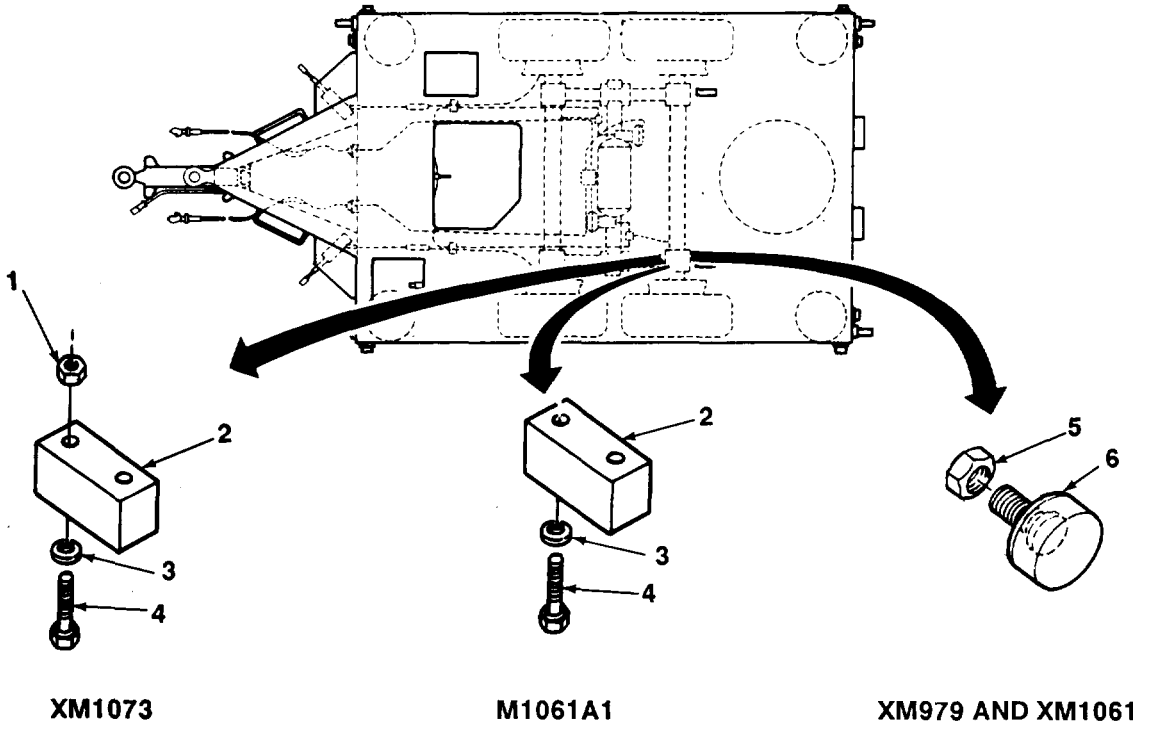

TA700995

4-51. SPRING BUMPER AND BUMPER PAD REPLACEMENT (Con't).

b. INSTALLATION

1. On XM979 and XM1061, install spring bumper (6) with nut (5).
2. On M1061A1, install bumper pad (2) with two flatwashers (3) and screws (4).
3. On XM1073, install bumper pad (2) with two screws (4), flatwashers (3), and new locknuts (1).

Section XI. BODY MAINTENANCE

4-52. COVER REPLACEMENT.

This Task Covers:

a. Removal

b. Installation

Initial Setup:

Materials/Parts:

- Four lockwashers

Tools/Test Equipment:

- General mechanic's tool kit

a. REMOVAL

Remove four screws (1), lockwashers (2), and cover (3). Discard lockwashers.

b. INSTALLATION

Install cover (3) with four screws (1) and new lockwashers (2).

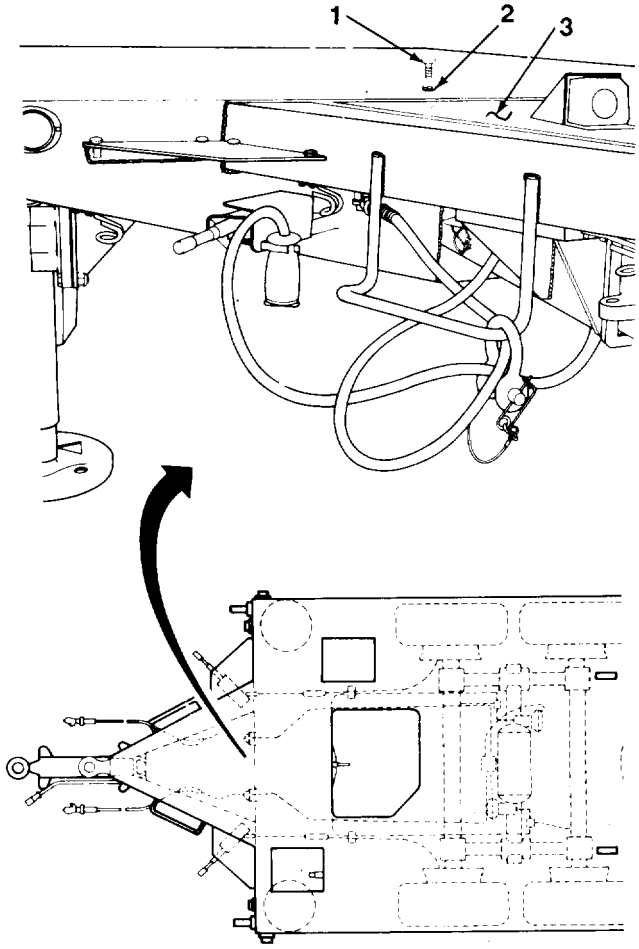

TA700996

Section XII. ACCESSORY ITEMS MAAINTENANCE

Paragraph Title	Page Number
Cargo Cover Hook Replacement (XM979 and XM1061)	4-102
Data Plate Replacement	4-104
Reflector Replacement	4-99
Tie-down Shackle and Swivel Ring Replacement (XM1073)	4-103
Wheel Chock and Holder Maintenance	4-100

4-53. REFLECTOR REPLACEMENT.

This Task Covers:

a. Removal

b. Installation

Initial Setup:

Materials/Parts:

- Two lockwashers

Tools/Test Equipment:

- General mechanic's tool kit

a. REMOVAL

Remove two screws (2), lockwashers (3), and reflector (1). Discard lockwashers.

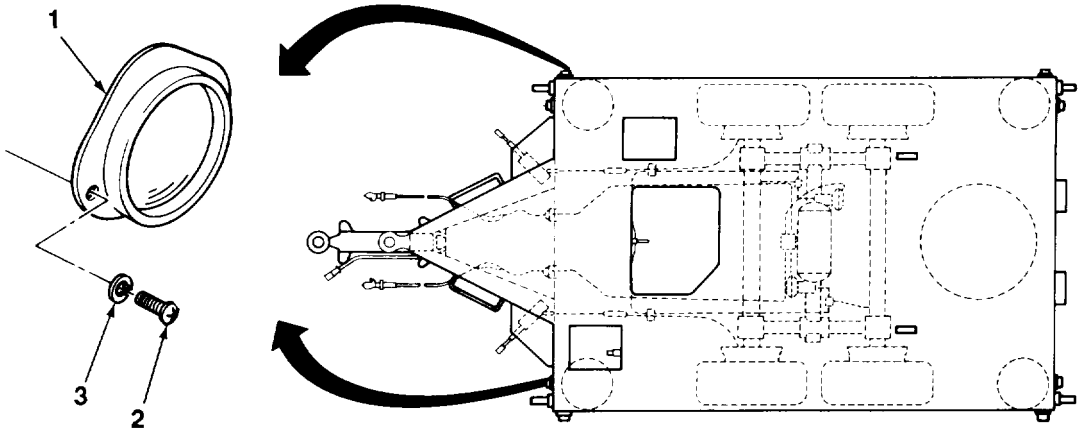

b. INSTALLATION

Install reflector (1) with two screws (2) and new lockwashers (3).

TA700997

4-54. WHEEL CHOCK AND HOLDER MAINTENANCE.

This Task Covers:

a. Removal
b. Disassembly
c. Assembly
d. Installation

Initial Setup:

Materials/Parts:

- Three lockwashers

Tools/Test Equipment:

- General mechanic's tool kit

a. REMOVAL

1. Remove wheel chock (3) from holder (5).
2. Remove three bolts (4), lockwashers (1), and two nuts (2). Remove holder (5). Discard lockwashers.

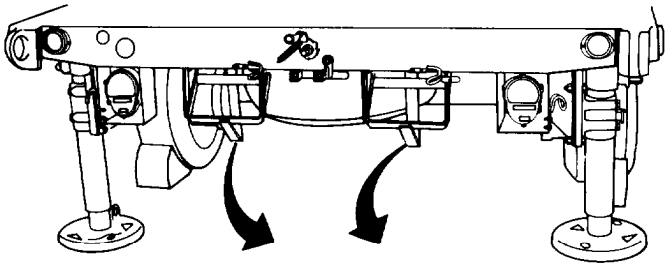

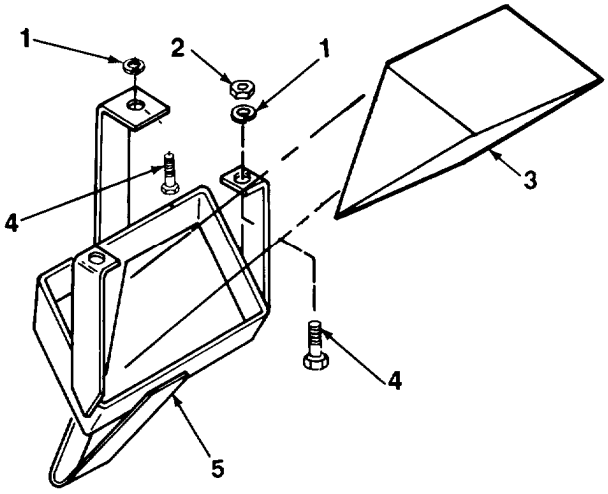

TA700998

4-54. WHEEL CHOCK AND HOLDER MAINTENANCE (Con't).

b. DISASSEMBLY

1. Remove nut (7) and flatwasher (8). Remove bolt (6) and chain (9) from wheel chock (3).
2. Spread snap hook (10) to remove chain (9). Cut chain if welded.

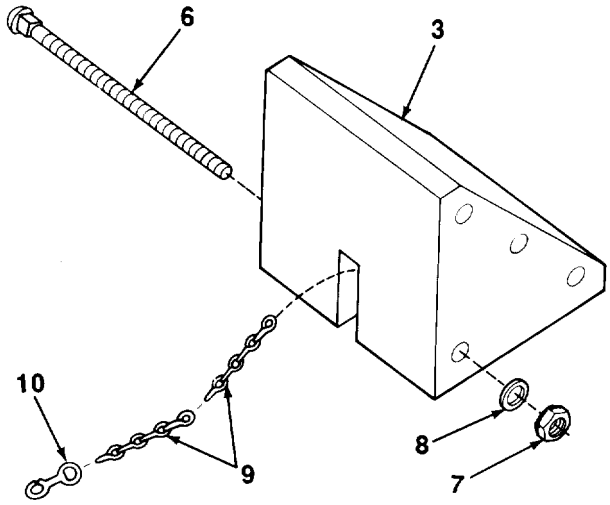

c. ASSEMBLY

1. Spread snap hook (10) and install on chain (9). Close snap hook.
2. Position chain (9) in groove of wheel chock (3).
3. Insert bolt (6) through wheel chock (3) and link of chain (9).
4. Install flatwasher (8) and nut (7) on bolt (6).

d. INSTALLATION

1. Install holder (5) with three bolts (4), new lockwashers (1), and two nuts (2).
2. Stow wheel chock (3) in holder (5).

TA700999

4-55. CARGO COVER HOOK REPLACEMENT (XM979 AND XM1061).

This Task Covers:

a. Removal

b. Installation

Initial Setup:

Materials/Parts:

- Two lockwashers

Tools/Test Equipment:

- General mechanic's tool kit

a. REMOVAL

Remove two nuts (1), lockwashers (2), bolts (4), and cargo cover hook (3) from frame (5). Discard lockwashers.

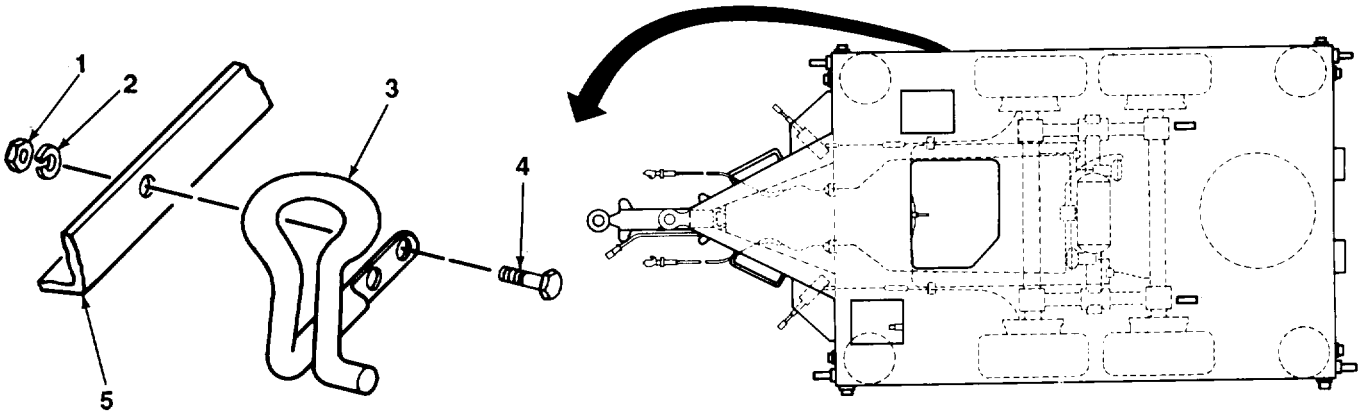

b. INSTALLATION

Install cargo cover hook (3) on frame (5) with two bolts (4), new lockwashers (2), and nuts (1).

TA701000

4-56. TIE-DOWN SHACKLE AND SWIVEL RING REPLACEMENT (XM1073).

This Task Covers:

a. Removal

b. Installation

Initial Setup:

Materials/Parts:

- One cotter pin
- One lockwasher

Tools/Test Equipment:

- General mechanic's tool kit

a. REMOVAL

1. Remove cotter pin (4), pin (1), washer (3), and shackle (2) from trailer. Discard cotter pin.
2. Remove nut (7), lockwasher (6), and swivel ring (5) from trailer. Discard lockwasher.

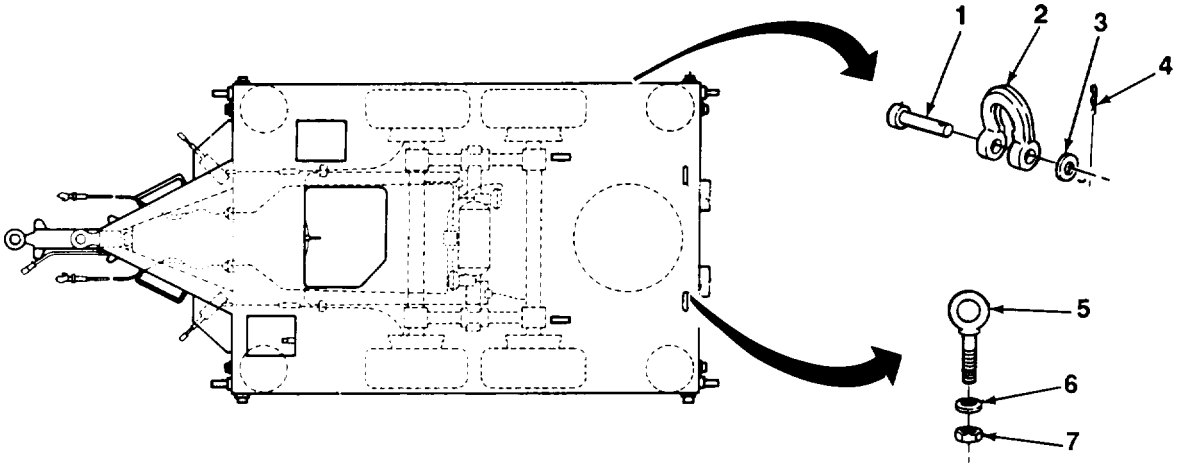

b. INSTALLATION

1. Install swivel ring (5) with new lockwasher (6) and nut (7).
2. Install shackle (2) with pin (1), washer (3), and new cotter pin (4).

TA701001

4-57. DATA PLATE REPLACEMENT

This Task Covers:

a. Removal

b. Installation

Initial Setup:

Materials/Parts:

- Six drive screws

Tools/Test Equipment:

- General mechanic's tool kit
- Industrial goggles

a. REMOVAL

WARNING

Wear eye protection when driving heads off drive screws. Failure to follow this warning may result in eye Injury or loss of vision.

1. Use hammer and chisel to remove heads of six drive screws (2).
2. Use hammer and 1/8 in. punch to drive remainder of drive screws (2) out of holes. Remove data plate (1). Discard drive screws.

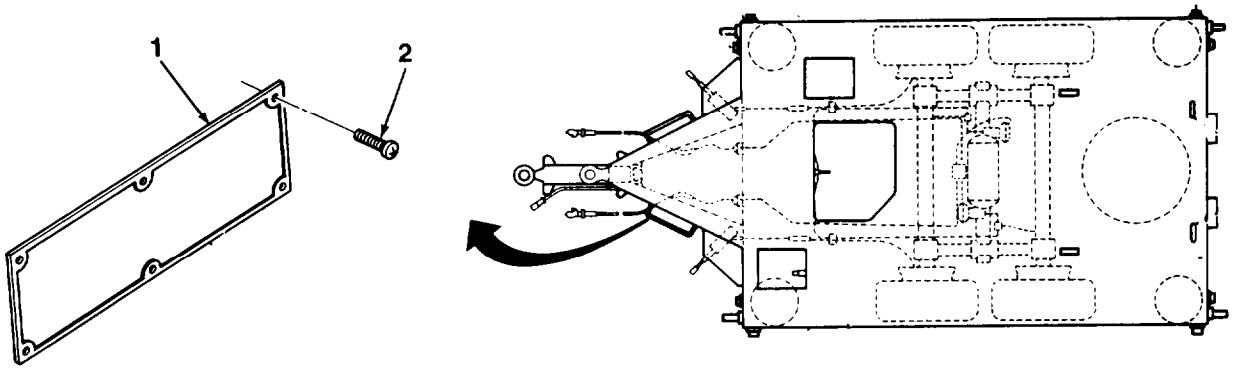

b. INSTALLATION

1. Position data plate (1) and six new drive screws (2).
2. Use hammer to install drive screws (2) into holes.

TA701002

Section XIII. NONELECTRICAL GAGES MAINTENANCE

4-58. ODOMETER DRIVE SHAFT AND MOUNTING PLATE REPLACEMENT (XM979).

This Task Covers:

a. Removal

b. Installation

Initial Setup:

Materials/Parts:

- Two gaskets
- Nineteen lockwashers

Tools/Test Equipment:

- General mechanic's tool kit

a. REMOVAL

1. Remove three screws (6), lockwashers (5), access cover (4), and gasket (7) from hub. Discard gasket and lockwashers.

2. Remove nut (9) and lockwasher (10) from drive shaft (8). Discard lockwasher.

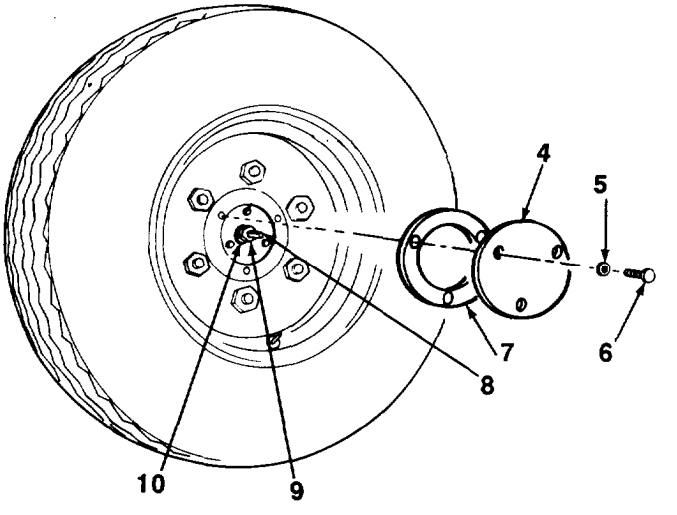

TA701003

4-58. ODOMETER DRIVE SHAFT AND MOUNTING PLATE REPLACEMENT (XM979) (Con't).

3. Remove two screws (16), lockwashers (15), and spacer plate (14) from rear axle (17). Discard lockwashers.

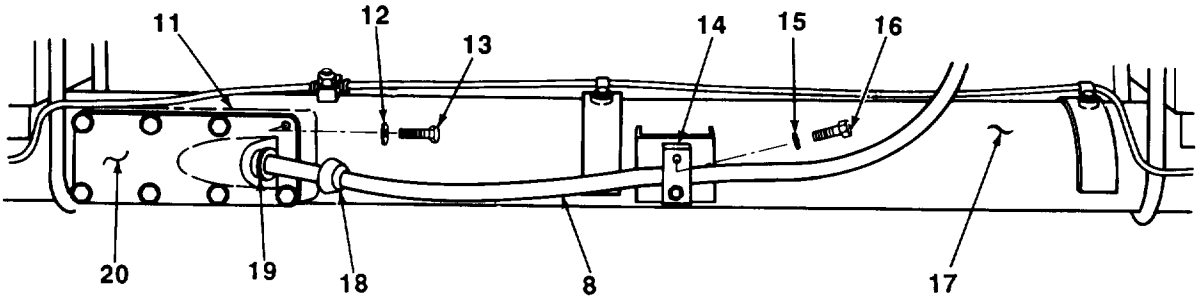

4. Remove two screws (22), lockwashers (23), and spacer plate (21) from chassis. Discard lockwashers.

5. Loosen swivel nut (18) at connector (19) and slide drive shaft (8) out of mounting plate (20). Remove drive shaft.

6. Remove connector (19) from mounting plate (20).

7. Remove eight screws (13), lockwashers (12), mounting plate (20), and gasket (11) from rear axle (17). Discard gasket and lockwashers.

8. Remove three screws (3), lockwashers (2), and hub adapter plate (1). Discard lockwashers.

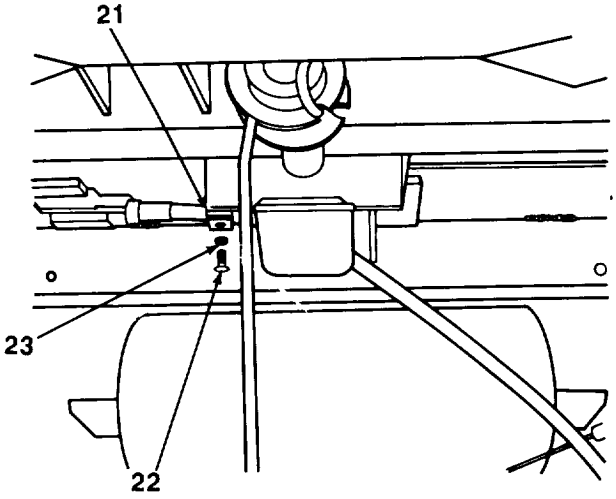

b. INSTALLATION

1. Install connector (19) on mounting plate (20).

2. Install drive shaft (8) through new gasket (11) and mounting plate (20).

NOTE

It may be necessary to use a piece of wire to help guide drive shaft through rear axle.

3. Feed drive shaft (8) through rear axle (17).

TA701004

4-58. ODOMETER DRIVE SHAFT AND MOUNTING PLATE REPLACEMENT (XM979) (Con't).

4. Install hub adapter plate (1) with three screws (3) and new lockwashers (2).

5. Install new lockwasher (10) and nut (9) on drive shaft (8).

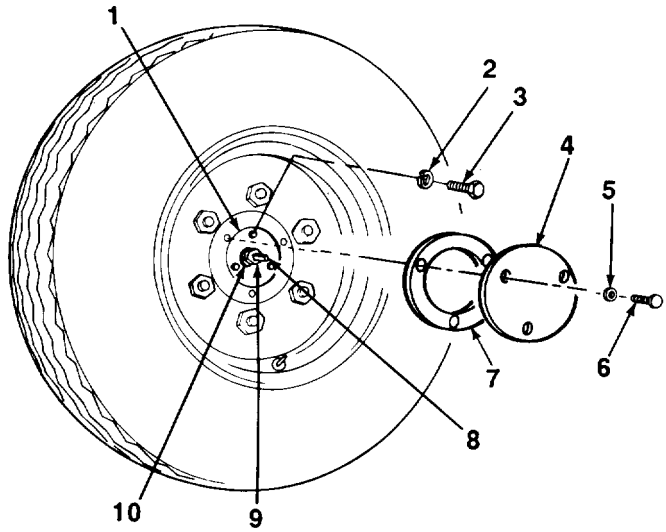

6. Install new gasket (11) and mounting plate (20) on rear axle (17) with eight screws (13) and new lockwashers (12).

7. Tighten swivel nut (18) on connector (19).

8. Position drive shaft (8) in bracket on chassis and install spacer plate (21) with two screws (22) and new lockwashers (23).

9. Position drive shaft (8) in bracket on rear axle (17) and install spacer plate (14) with two screws (16) and new lockwashers (15).

10. Install new gasket (7) and access cover (4) on hub with three screws (6) and new lockwashers (5).

TA701005

Section XIV. PAINTING AND IDENTIFICATION MARKING

Paragraph Title	Page Number
Painting	4-108
Stenciling	4-108

4-59. PAINTING.

a. Instructions for the preparation of materiel for painting, methods of painting, and materials to be used are contained in TM 43-0139, *Painting/Instructions for Army Materiel.*

b. Instructions for camouflage painting are contained in FM 5-20, *Camouflage,* and TB 43-0209, *Color Marking, and Camouflage Painting of Military Vehicles, Construction Equipment, and Materials Handling Equipment.*

4-60. STENCILING.

Stencil locations are shown in the following illustrations. Refer to TB 43-0209 for instructions on application of stencils.

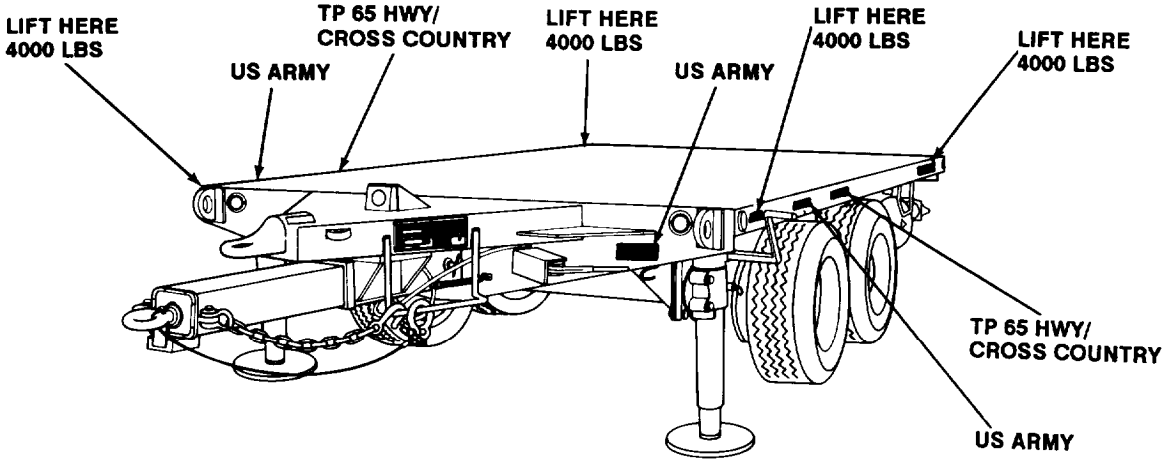

TA701006

4-60. STENCILING (Con't).

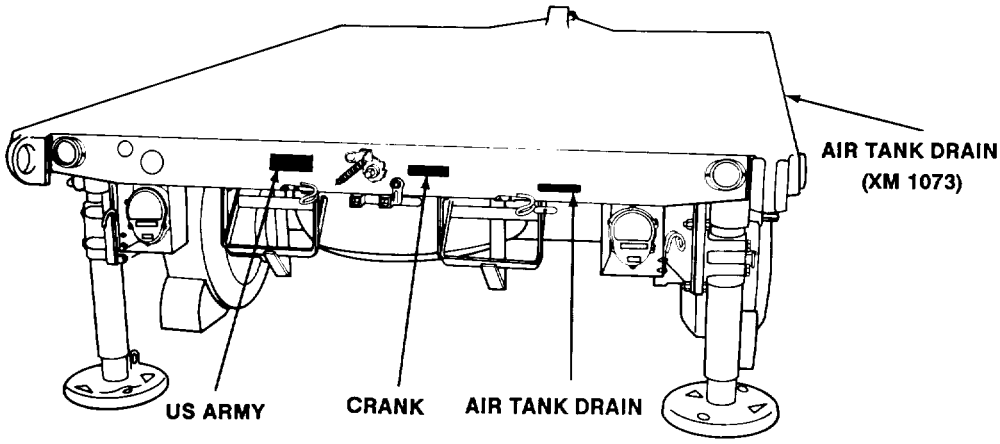

TA701007

Section XV. PREPARATION FOR STORAGE OR SHIPMENT

Paragraph Title	Page Number
Care of Equipment in Administrative Storage	4-112
Definition of Administrative Storage	4-110
General	4-110
Preparation of Equipment for Administrative Storage	4-110
Preparation of Equipment for Shipment	4-113
Procedures for Common Components and Miscellaneous Items	4-112
Removal of Equipment from Administrative Storage	4-113

4-61. GENERAL.

a. This section contains requirements and procedures for administrative storage of equipment that isssued to and in use by Army activities worldwide.

b. The requirements specified herein are necessary to maintain equipment in administrative storage in such a way as to achieve the maximum readiness condition.

c. Equipment that is placed in administrative storage should be capable of being readied to perform its mission within 24 hours, or as otherwise may be prescribed by the approving authority. Before equipment is placed in administrative storage, a current PMCS should be completed and deficiencies corrected.

d. Report equipment in administrative storage as prescribed for all reportable equipment.

e. Perform inspections, maintenance services, and lubrication as specified herein.

f. Records and reports to be maintained for equipment in administrative storage are those prescribed by DA Pam 738-750 for equipment in use.

g. A 10% variance is acceptable on time, running hours, or mileage used to determine required maintenance actions.

h. Accomplishment of applicable PMCS, as mentioned throughout this section, will be on a quarterly basis.

4-62. DEFINITION OF ADMINISTRATIVE STORAGE.

The placement of equipment in administrative storage can be for short periods of time when a shortage of maintenance effort exists. Items should be ready for use within the time factors determined by the directing authority, During storage, appropriate records will be kept.

4-63. PREPARATION OF EQUIPMENT FOR ADMINISTRATIVE STORAGE.

a. **Storage Site.**

(1) Select the best available site for administrative storage. Separate stored equipment from equipment in use. Conspicuously mark the area “Administrative Storage”.

(2) Covered space is preferred.

(3) Open sites should be improved hardstand, if available. Unimproved sites should be firm, well-drained, and free of excessive vegetation.

b. **Storage Plan.**

(1) Store equipment so as to provide maximum protection from the elements and to provide access for inspection, maintenance, and exercising. Anticipate removal or deployment problems and take suitable precautions.

4-63. PREPARATION OF EQUIPMENT FOR ADMINISTRATIVE STORAGE (Con't).

(2) Take into consideration environmental conditions such as extreme heat or cold; high humidity; blowing sand, dust, or loose debris; soft ground; mud; heavy snows; or any combination thereof, and take adequate precautions.

(3) Establish a fire plan and provide adequate fire fighting equipment and personnel.

c. Maintenance Service and Inspection.

(1) **Maintenance Service.** Prior to storage, perform the next scheduled organizational PMCS.

(2) **Inspection.** Inspect and approve the equipment prior to storage. Do not place non-mission capable equipment in storage.

d. Auxillary Equipment and Basic issue Items.

(1) Process auxiliary equipment and basic issue items simultaneously with the major end item to which they are assigned.

(2) If possible, store auxiliary equipment and basic issue items with the major item.

(3) If stored apart from the major item, mark auxiliary equipment and basic issue items with tags indicating the major item, its registration or serial number and location, and store in protective type closures. In addition, place a tag or list indicating the location of the removed items in a conspicuous place on the major item.

e. **Correction of Shortcomings and Deficiencies.** Correct all shortcomings and deficiencies prior to storage, or obtain a deferment from the approving authority.

f. **Lubrication.** Lubricate equipment in accordance with instructions in Chapter 3, Section I.

g. **General Cleaning, Painting, and Preservation.**

CAUTION

Do not direct water or steam, under pressure, against unsealed electrical systems or any exterior opening if it will damage a component.

(1) **Cleaning.** Clean the equipment of dirt, grease, and other contaminants but do not use vapor decreasing.

(2) **Painting.** Remove rust and damaged paint by scraping, wire brushing, sanding, or buffing. Sand to a smooth finish and spot paint as necessary (TB 43-0209).

(3) **Preservation.** After cleaning and drying, immediately coat unpainted metal surfaces with an oil or grease, as appropriate (Chapter 3, Section I).

CAUTION

Place a piece of barrier material (item 1, Appendix E) between desiccant bags and metal surfaces to prevent corrosion.

NOTE

Air circulation under draped covers reduces deterioration from moisture and heat.

(4) **Weatherproofing.** Sunlight, heat, moisture (humidity), and dirt tend to accelerate deterioration. Install all covers (including vehicle protective closures) authorized for the equipment. Close and secure all openings except those required for venting and draining. Seal openings to prevent entry of rain, snow, or dust. insert desiccant when complete seal is required. Place equipment and provide blocking or framing to allow for ventilation and water drainage. Support cover away from surfaces that may rust, rot, or mildew.

4-64. CARE OF EQUIPMENT IN ADMINISTRATIVE STORAGE.

a. **Maintenance Services.** After equipment has been placed in administrative storage, inspect, service, and exercise as specified

b. **Inspection.** Inspection will usually be visual and must consist of at least a walkaround examination of all equipment to detect any deficiencies. Inspect equipment in open storage weekly and equipment in covered storage monthly. Inspect all equipment immediately after any severe storm or environmental change. The following are examples of things to look for during a visual inspection:

(1) Low or flat tires.

(2) Condition of preservatives, seals, and wraps.

(3) Torn, frayed, or split canvas covers and tops.

(4) Corrosion or other deterioration.

(5) Missing or damaged parts.

(6) Water in compartments.

(7) Any other readily recognizable shortcomings or deficiencies.

c. **Repair During Administrative Storage.** Keep equipment in an optimum state of readiness. Accomplish the required services and repairs as expeditiously as possible. Whenever possible, perform all maintenance onsite.

d. Exercising. Exercise equipment in accordance with Table 4-3 and the following instructions:

(1) **Vehicle Major Exercise.** Depreserve equipment by removing only that material restricting exercise. Close all drains, remove blocks, and perform all before-operation checks. Couple trailer to towing vehicle and drive for at least 25 mi (40 km). Make several right and left 90° turns. Make several hard braking stops without skidding. Do the following during exercising when it is convenient: operate all other functional components and perform all during- and after- operation checks.

(2) **Scheduled Services.** Scheduled services will include inspection per subparagraph b above and will be conducted in accordance with Table 4-3. Lubricate in accordance with instructions in Chapter 3, Section I.

(3) **Corrective Action.** Immediately take action to correct shortcomings and deficiencies noted. Record inspection and exercise results on DA Form 2404. Record and report all maintenance actions on DA Form 2407. After exercising, restore the preservation to the original condition. Replenish lubricants used during exercising and note the amount on DA Form 2408.

e. **Rotation.** Rotate items in accordance with any rotational plan that will keep equipment in an operational condition and the maintenance effort.

Table 4-3. Exercise Schedule.

Weeks	2	4	6	8	10	12	14	16	18	20	22	24
PMCS						X						X
Scheduled Services		X		X		X		X		X		
Major Exercise												X

4-65. PROCEDURES FOR COMMON COMPONENTS AND MISCELLANEOUS ITEMS.

a. **Tires.** Visually inspect tires during each walkaround inspection. This inspection includes checking with a tire gage. Inflate repair, or replace as necessary those found to be low, damaged, or excessively worn. Mark inflated and repaired tires with chalk for checking at the next inspection.

4-65. PROCEDURES FOR COMMON COMPONENTS AND MISCELLANEOUS ITEMS (Con't).

b. **Air Lines and Air Reservoir.** Drain air lines and air reservoir of condensation and leave draincock open. Attach a caution tag, annotated to provide for closing of draincock when equipment is exercised. Place tag in a conspicuous location.

c. **Seals.** Seals may develop leaks during storage, or shortly thereafter. If leaking persists, refer to the applicable maintenance section in this manual for corrective maintenance procedures.

4-66. REMOVAL OF EQUIPMENT FROM ADMINISTRATIVE STORAGE.

a. **Activation.** Restore the equipment to normal operating condition in accordance with the instructions contained in Chapter 4, Section II.

b. **Servicing.** Resume the maintenance service schedule in effect at the commencement of storage, or service the equipment before the scheduled dates in order to produce a staggered maintenance workload.

4-67. PREPARATION OF EQUIPMENT FOR SHIPMENT

a. Refer to TM 55-21, TM 55-601, and TM 743-200-1 for additional instructions on processing, storage, and shipment of materiel.

b. Trailers that have been removed from storage for shipment do not have to be reprocessed if they will reach their destination within the administrative storage period. Reprocess only if inspection reveals any corrosion or if anticipated intransit weather conditions make it necessary.

c. When a trailer is received and has already been processed for domestic shipment, as indicated on DD Form 1397, it does not have to be reprocessed for storage unless corrosion and deterioration are found during the inspection upon receipt. List on SF Form 364 all discrepancies found because of poor preservation, packaging, packing, marking, handling, loading, storage, or excessive preservation. Repairs that cannot be handled by the receiving unit must have tags attached listing needed repairs. A report of these conditions will be submitted by the unit commander for action by an ordnance maintenance unit.

CHAPTER 5
DIRECT SUPPORT AND GENERAL SUPPORT MAINTENANCE

Section I. AXLE MAINTENANCE

Paragraph Title	Page Number
Bogie Assembly Replacement..	5-1
Front and Rear Axle Replacement	5-7
Trunnion Axle Replacement	5-9

5-1. BOGIE ASSEMBLY REPLACEMENT.

This Task Covers.

a. Removal

b. Installation

Initial Setup:

Equipment Conditions:

- Trailer uncoupled from towing vehicle (para 2-12).
- Air reservoir removed (para 4-41).
- Odometer drive shaft and mounting plate removed (XM979) (para 4-58).
- Front and rear leveling jacks lowered (para 2-13).

Tools/Test Equipment:

- General mechanic's tool kit
- Drain pan
- Overhead hoist
- Torque wrench

Materials/Parts:

- Rags (item 12, Appendix E)
- Tie-down straps (item 15, Appendix E)
- Twelve lockwashers (all except XM1073)
- Sixteen lockwashers (XM1073)

Personnel Required: Three

5-1. BOGIE ASSEMBLY REPLACEMENT (Con't).

a. REMOVAL

NOTE

Use a drain pan to catch any draining brake fluid. Clean up all spills.

1. Disconnect tube assembly (1) from master cylinder (2). Repeat for master cylinder on other side of trailer.

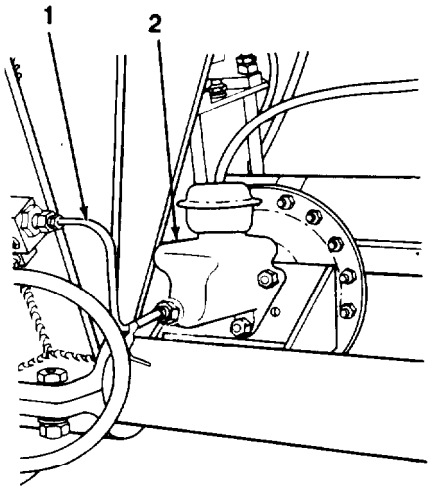

2. Loosen nut (3) and two nuts (11). Remove turnbuckle (4) from handbrake cable (10).

NOTE

On XM1073 there are two brackets on each side of frame, one for each handbrake cable.

3. Remove two nuts (9), lockwashers (8), and bolts (5). Remove bracket (6) from handbrake cable (10) and frame. Discard lockwashers.

4. Remove spring (7) from handbrake cable (10) and frame.

CAUTION

Handbrake cables must be tied up out of way of bogie assembly to prevent cables from becoming damaged.

5. Repeat steps 2 through 4 for handbrake cable (10) on other side of trailer. Use tie-down straps to tie handbrake cables up out of way of bogie assembly.

TA701008

5-1. BOGIE ASSEMBLY REPLACEMENT (Con't).

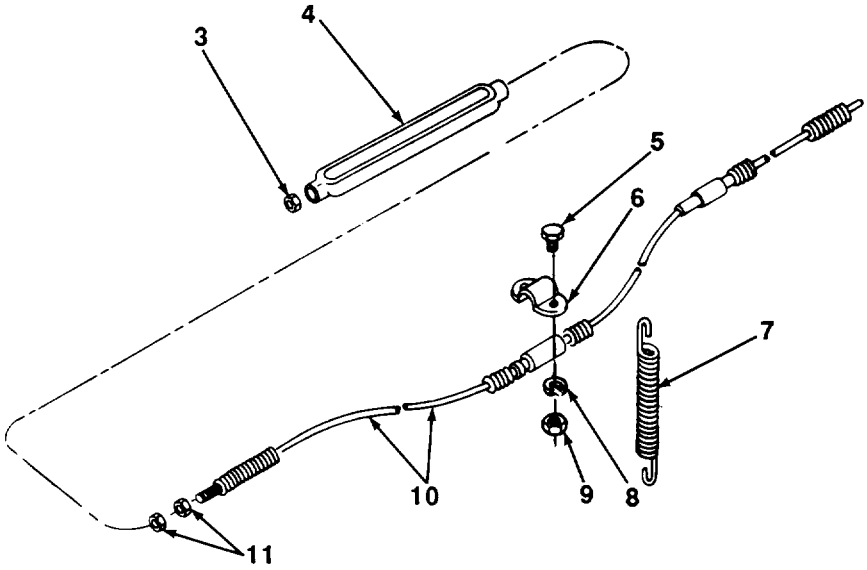

6. On one side of trailer, remove four nuts (12), lockwashers (13), and screws (15). Remove clamp (14). Repeat for other side of trailer. Discard lockwashers.

7. Prepare trailer for lifting (para 2-15).

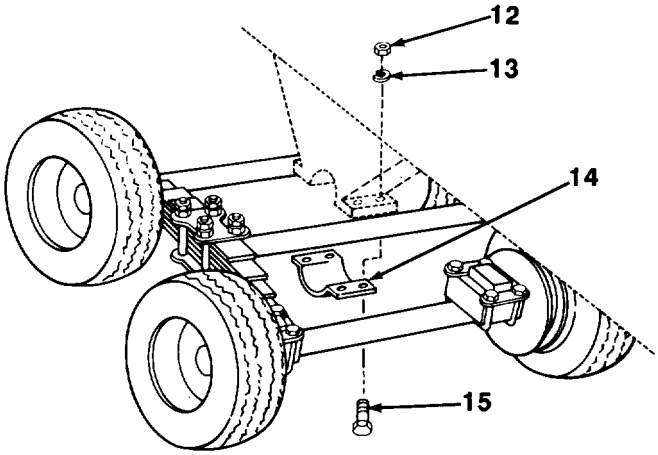

TA701009

5-1. BOGIE ASSEMBLY REPLACEMENT (Con't).

WARNING

Never crawl under equipment when performing maintenance unless equipment is securely blocked. Keep clear of equipment when It is being raised or lowered. Do not allow heavy components to swing while suspended from lifting device. Exercise extreme caution when working near a cable or chain under tension. Failure to follow this warning could result in severe injury or death to personnel.

8. Use overhead hoist to raise trailer to clear bogie assembly.

9. Raise rear leveling jacks to stowed position (para 2-13).

10. Push or pull bogie assembly out from under rear of trailer.

11. Lower rear leveling jacks (para 2-13). Lower overhead hoist enough to rest trailer on leveling jacks. Remove lifting sling from each lifting eye (para 2-1 5).

b. INSTALLATION

WARNING

Never crawl under equipment when performing maintenance unless equipment is securely blocked. Keep clear of equipment when it is being raised or lowered. Do not allow heavy components to swing while suspended from lifting device. Exercise extreme caution when working near a cable or chain under tension. Failure to follow this warning could result in severe injury or death to personnel.

1. Prepare trailer for lifting (para 2-15), Use overhead hoist to raise trailer off leveling jacks.

2. Raise rear leveling jacks to stowed position (para 2-13).

3. Use overhead hoist to raise trailer to allow sufficient clearance for bogie assembly.

4. Push or pull bogie assembly under trailer and lower trailer onto bogie assembly.

5. Lower rear leveling jacks (para 2-13).

6. Lower trailer frame until trunnion axle brackets seat on trunnion axle (16).

7. On one side of trailer, install clamp (14) with four screws (15), new lockwashers (1 3), and nuts (1 2). Torque nuts to 85-105 Ib.-ft. (115-142 N•m). Repeat for other side of trailer.

8. Remove lifting sling from each lifting eye (para 2-15).

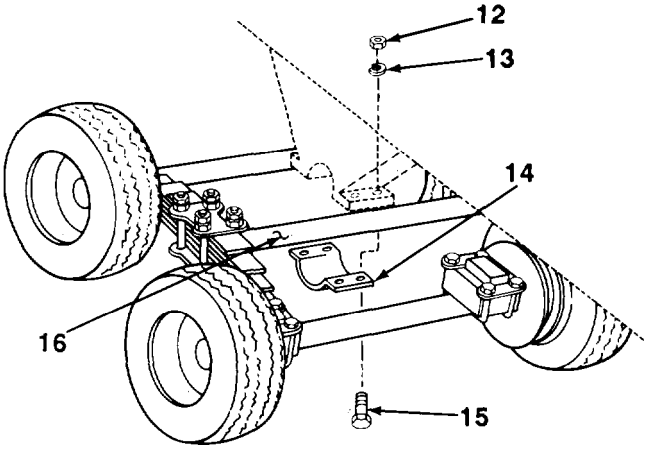

TA701010

5-1. BOGIE ASSEMBLY REPLACEMENT (Con't).

NOTE

On XM1073 there are two brackets on each side of frame, one for each handbrake cable.

9. Secure handbrake cable (10) to frame with bracket (6), two bolts (5), new lockwashers (8), and nuts (9).

10. Install turnbuckle (4) onto handbrake cable (10) with nut (3) and two nuts (11). Do not tighten nuts at this time. Nuts will be tightened when handbrakes are adjusted.

11. Connect spring (7) to handbrake cable (10) and frame.

12. Repeat steps 9 through 11 for handbrake cable (10) on other side of trailer.

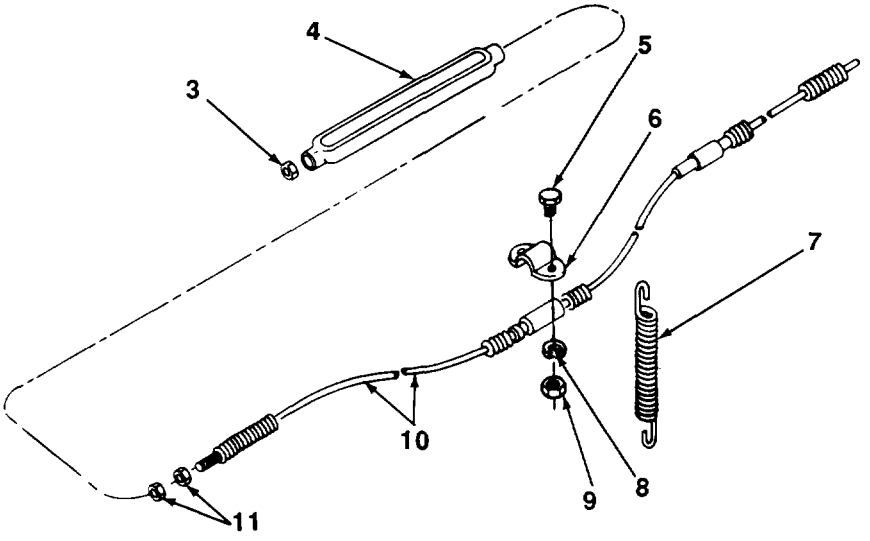

TA701011

5-1. BOGIE ASSEMBLY REPLACEMENT (Con't).

13. Connect tube assembly (1) to master cylinder (2), Repeat for master cylinder on other side of trailer.

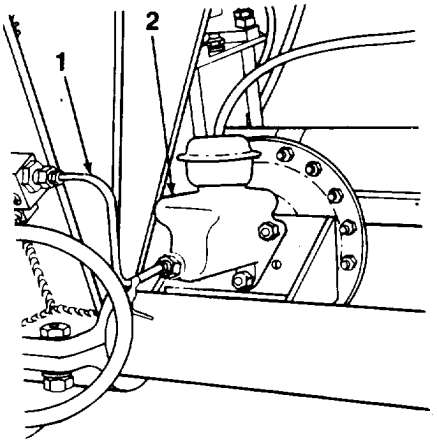

FOLLOW-ON TASKS:

- Install air reservoir (para 4-41).
- Install odometer drive shaft and mounting plate (XM979) (para 4-58).
- Adjust handbrakes (para 4-28).
- Bleed brakes (para 4-31).

TA701012

5-2. FRONT AND REAR AXLE REPLACEMENT.

This Task Covers:

a. Removal

b. Installation

Initial Setup:

Equipment Conditions:

- Bogie assembly removed (para 5-1).
- Wheels chocked on each end of axle not being removed (para 4-17).

Personnel Required: Two

Tools/Test Equipment:

- General mechanic's tool kit
- Floor jack
- Two jackstands

a. REMOVAL

1. Place a jackstand under each spring assembly (2) between trunnion axle (1) and axle (3) to be removed.

2. Place a floor jack under axle (3) to be removed.

3. Remove service brakes and backing plates from axle (3) to be removed (para 4-29).

4. Remove hydraulic hose, tubes, and fittings from axle (3) (para 4-34).

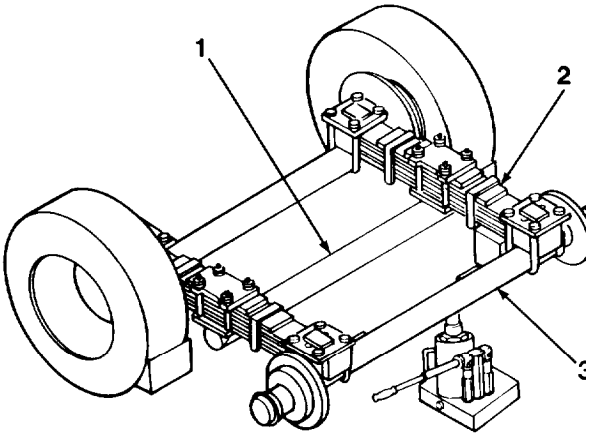

WARNING

- **Ensure that spring assembly is supported before removing axle. Spring assembil will fall without support. Failure to follow this warning may result** in serious injury to **personnel.**

- **Axle is heavy and awkward to handle. Use caution, provide adequate support, and use assistance when removing. Failure to follow this warning may result in serious injury or death.**

5. Disconnect spring assembly (2) from each end of axle (3) (para 5-6).

6. Lower and remove axle (3).

TA701013

5-2. FRONT AND REAR AXLE REPLACEMENT (Con't).

b. INSTALLATION

WARNING

Axle is heavy and awkward to handle. Use caution, provide adequate support, and use assistance when installing. Failure to follow this warning may result in serious injury or death.

1. Position axle (3) under spring assemblies (2) and raise with floor jack.
2. Connect spring assembly (2) at each end of axle (3) (para 5-6).
3. Install hydraulic hose, tubes, and fittings to axle (3) (para 4-34).
4. Install backing plates and service brakes to axle (3) (para 4-29).
5. Install hubs and brakedrums (para 4-44).
6. Install tires and wheels (para 4-43). Remove floor jack from axle (3), Remove jackstands from spring assemblies (2).

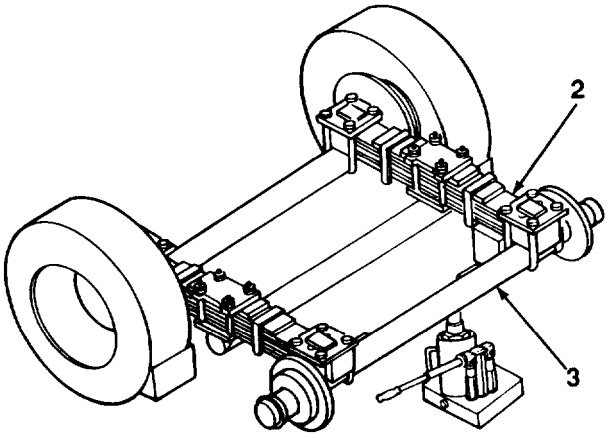

FOLLOW-ON TASKS:

- Remove wheel chocks from each end of axle not removed (para 4-17).
- Install bogie assembly (para 5-1).

TA701014

5-3. TRUNNION AXLE REPLACEMENT.

This Task Covers:

a. Removal

b. Installation

Initia/ Setup:

Equipment Conditions:

- Bogie assembly removed (para 5-1).
- Master cylinders removed (para 4-33).
- Airbrake chambers removed (para 4-42).

Tools/Test Equipment:

- General mechanic's tool kit
- Floor jack
- Puller kit
- Torque wrench

Materials/Parts:

- Grease (Item 8, Appendix E)
- Four lockwashers

Personnel Required: Two

a. REMOVAL

1. Place a floor jack under trunnion axle (4).

NOTE

Perform steps 2 through 9 at each end of trunnion axle.

2. Remove four jamnuts (2), nuts (1), and screws (9). Remove spacer plate (3).
3. Lower trunnion axle (4) from under spring assemblies (7).
4. Remove two socket head screws (16), lockwashers (15), and lockrings (14). Discard lockwashers.

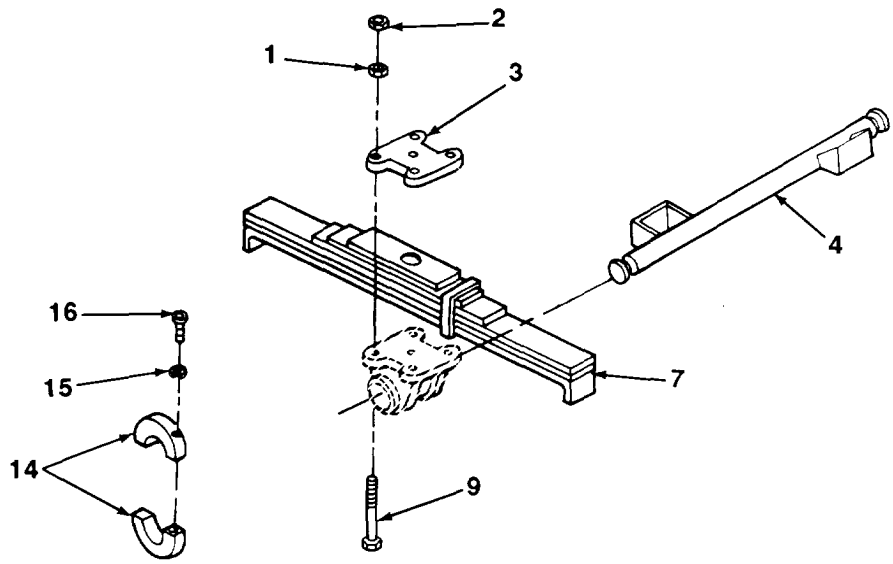

TA701015

5-3. TRUNNION AXLE REPLACEMENT (Con't).

5. If damaged, remove lubrication fitting (13) from trunnion axle (4) and discard.
6. Remove flatwasher (12) and thrust bearing washer (11) from trunnion axle (4).
7. Remove bracket assembly (8).
8. Inspect sleeve bearing (10)(para4-18), If scored, worn, or deformed, remove from bracket assembly (8) using a suitable puller. Discard sleeve bearing.
9. Remove thrust bearing washer (6) and flatwasher (5) from trunnion axle (4).

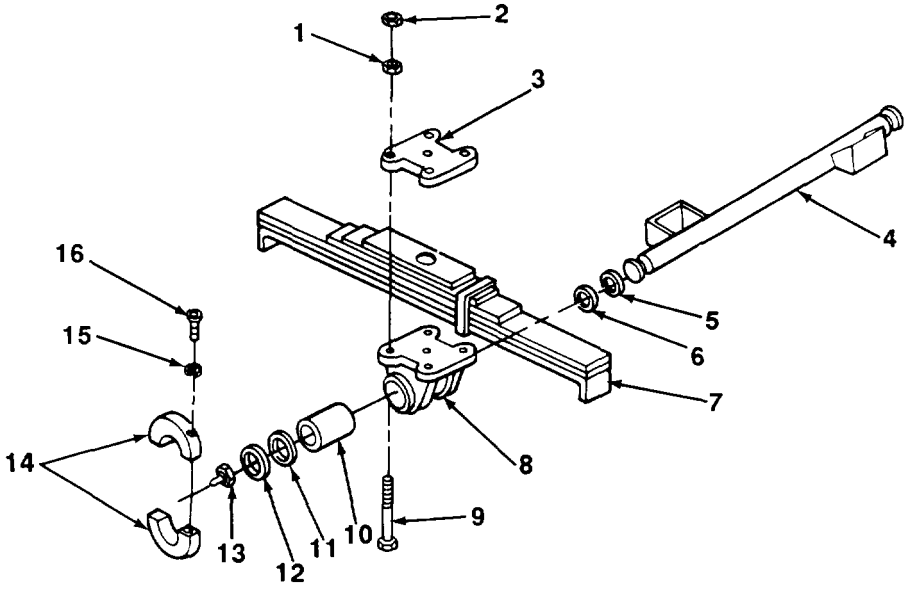

b. INSTALLATION

NOTE

Perform steps 1 through 8 at each end of trunnlon axle.

1. Install flatwasher (5) and thrust bearing washer (6) on trunnion axle (4).
2. If removed, use a block of wood and hammer to install new sleeve bearing (10) in bracket assembly (8).
3. Apply a thin coat of grease to sleeve bearing (10). Install bracket assembly (8) on trunnion axle (4).
4. Install thrust bearing washer (11) and flatwasher (12) on trunnion axle (4).
5. If removed, install new lubrication fitting (13) in trunnion axle (4).
6. Install two lockrings (14) with socket head screws (16) and new lockwashers (15).
7. Raise trunnion axle (4) into place under spring assemblies (7) and support.
8. Install spacer plate (3) with four screws (9) and nuts (l). Torque nuts to 150-175 lb.-ft. (203-237 N•m). Install four jamnuts (2).
9. Remove floor jack from under trunnion axle (4)

TA701016

5-3. TRUNNION AXLE REPLACEMENT (Con't).

FOLLOW-ON TASKS:

- Install airbrake chambers (para 4-42).
- Install master cylinders (para 4-33).
- Install bogie assembly (para 5-1).
- Lubricate trunnion axle (Chapter 3, Section 1).

Section II. TIRE MAINTENANCE

5-4. TIRE REPAIR.

Refer to TM 9-2610-200-14 for tire repair procedures.

Section III. FRAME AND TOWING ATTACHMENTS MAINTENANCE

5-5. UPPER TOWING LUNEITE REPLACEMENT.

This Task Covers:

a. Removal

b. Installation

Initial Setup:

Tools/Test Equipment:

- Welder's tool kit
- Welding shop set

References:

- TM 9-237

a. REMOVAL

NOTE

- **On trailers provided with a dual towing lunette system, lower towing lunette is fixed to Inertia brake actuator. If lower towing lunette requires replacement, perform inertia brake actuator assembly procedure (para 4-35).**
- **Upper towing lunette is fixed to main chassis of trailer. If upper towing lunette requires replacement, perform steps below.**

1. Remove towing lunette from frame bracket by torch cutting.
2. Grind frame bracket surface smooth and free of slag.

b. INSTALLATION

1. Weld replacement towing lunette to frame bracket using ½ in. (13 mm) fillet weld. Towing lunette should be located ½ in. (13 mm) from bottom of frame bracket.
2. Inspect weld with liquid penetrant in accordance TM 9-237. No cracks in weld area are permissible.

Section IV. SPRING ASSEMBLY MAINTENANCE

5-6. SPRING ASSEMBLY REPLACEMENT.

This Task Covers:

a. Removal

b. Installation

Initial Setup:

Equipment Conditions:

- Bogie assembly removed (para 5-1).
- Wheels chocked (para 4-17).
- Trunnion axle removed (para 5-3).

Tools/Test Equipment:

- General mechanic's tool kit
- Torque wrench

Materials/Parts:

- Four lockwashers

Personnel Required: Two

WARNING

Spring assembly is heavy. Two people are required to lift spring assembly. Failure to follow this warning may result in serious injury.

a. REMOVAL

1. Remove four jamnuts (3) and nuts (4). Remove two U-bolts (7). Repeat for other end of spring assembly (6).

2. Remove two nuts (2) and lockwashers (1). Remove shackle box cover (5) and top spacer (10). Repeat for other end of spring assembly (6). Discard lockwashers.

3. Remove spring assembly (6). Remove bottom spacer (9) and two side spacers (11) from each axle (8).

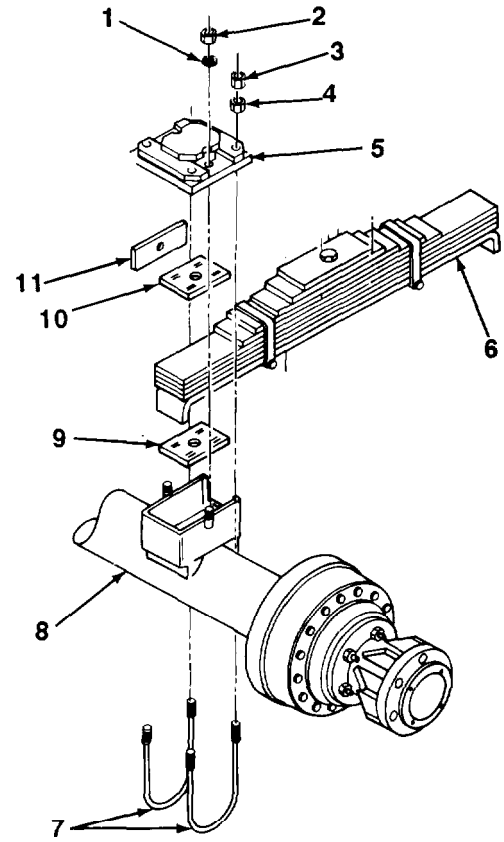

TA701017

5-6. SPRING ASSEMBLY REPLACEMENT (Con't).

b. INSTALLATION

1. Install bottom spacer (9) and two side spacers (11) in each axle (8).

2. Position spring assembly (6) on each axle (8).

3. Install top spacer (10) on spring assembly (6). Install shackle box cover (5) with two nuts (2) and new lockwashers (1). Repeat for other end of spring assembly (6).

4. Install two U-bolts (7) with four nuts (4). Torque nuts to 85-105 lb.-ft. (115-142 N•m). Install four jamnuts (3). Repeat for other end of spring assembly (6).

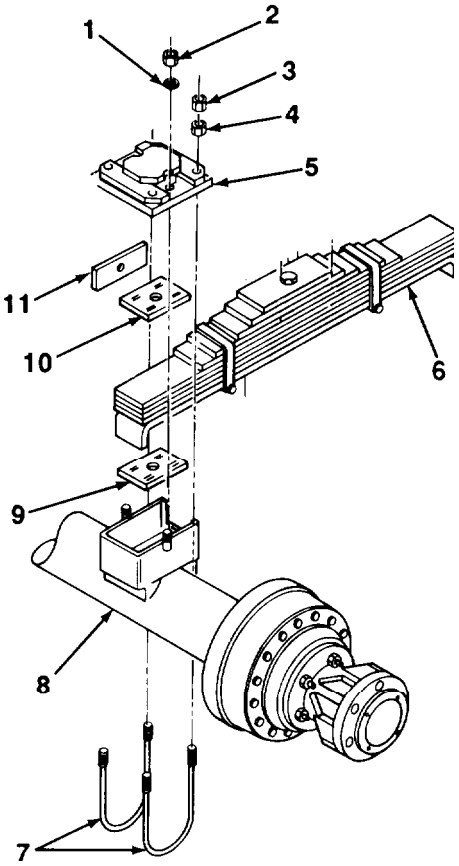

FOLLOW-ON TASKS:

- Install trunnion axle (para 5-3).
- Remove wheel chocks (para 4-17).
- Install bogie assembly (para 5-1).

TA701018

APPENDIX A
REFERENCES

A-1. SCOPE.

This appendix lists all publications referenced in or required for use with this technical manual.

A-2. PUBLICATION INDEX.

DA Pam 25-30, *Consolidated Index of Army Publications and B/ank forms,* should be consulted frequently for the latest changes or revisions and for new publications relating to materiel covered in this technical manual.

A-3. FORMS.

Refer to DA Pam 738-750, *The ArrnyMaintenance Management System (TAMMS),* for instructions on the use of maintenance forms.

Equipment Inspection and Maintenance Worksheet . . . . . DA Form 2404
Equipment Log Assembly (Records).. . . . . .. DA Form 2408
Maintenance Request Form.. . . . . .. DA Form 2407
Preventive Maintenance Schedule and Record . . . . DD Forrn 314
Processing and Reprocessing Record for Shipment, Storage, and
lssue of Vehicles and Spare Engines . . . . DD Form 1397
Product Quality Deficiency Report . . . . SF Form 368
Recommended Changes to Equipment Technical Publications . . . . . DA Form 2028-2
Recommended Changes to Publications and Blank Forms . . . . . DA Form 2028
Report of Discrepancy (ROD) . . . . SF Form 364

A-4. FIELD MANUALS.

Camouflage . . . . . FM 5-20
Desert Operations . . . . . FM 90-3
First Aid for Soldiers . . . . . FM 21-11
Manual for the Wheeled Vehicle Driver . . . . . FM 21-305
NBC Contamination Avoidance . . . . . .FM 3-3
NBC Decontamination . . . . . .FM 3-5
NBC Protection . . . .FM 3-4
Operation and Maintenance of Ordnance Materiel in Cold Weather(O°F to - 65°F) . . . . . FM 9-207

A-5. TECHNICAL BULLETINS.

Color, Marking, and Camouflage Painting of Military Vehicles,
Construction Equipment, and Materials Handling Equipment . . . . . TB 43-0209
Soldering Methods and Equipment . . . . TB SIG 222

A-6. TECHNICAL MANUALS.

inspection, Care, and Maintenance of Antifriction Bearings . . . . TM 9-214
Materials Used for Cleaning, Preserving, Abrading, and Cementing
Ordnance Materiel and Related items Including Chemicals . . . . . TM 9-247
Operator's Manual for Welding Theory and Application . . . . TM 9-237

A-6. TECHNICAL MANUALS (Con't).

Operator's, Unit, Direct Support, and General Support Maintenance Manual
for Care, Maintenance, Repair, and Inspection
of Pneumatic Tires andnner Tubes . . . . TM 9-2610-200-14

Painting instructions for Army Materiel . . . . TM 43-0139

Procedures for Destruction of Tank-Automotive Equipment to Prevent Enemy Use . . . . . TM 750-244-6

Railcar Loading Procedures . . . . TM 55-601

Railway Operating and Safety Rules . . . . TM 55-21

Storage and Materials Handling . . . . TM 743-200-1

A-7. OTHER PUBLICATIONS.

Army Logistics Readiness and Sustainability . . . . . AR 700-138

Army Medical Debarment Expendable/Durable items . . . . . CTA 8-100

Expendable/Durable Items(Except Medical, Class V, Repair Parts, and Heraldic items) . . . . . CTA 50-970

APPENDIX B
MAINTENANCE ALLOCATION CHART

Section I. INTRODUCTION

B-1. GENERAL.

a. This section provides a general explanation of all maintenance and repair functions authorized at the various maintenance levels.

b. The Maintenance Allocation Chart (MAC) in Section II designates overall authority and responsibility for the performance of maintenance functions on the identified end item or component. The application of the maintenance functions to the end item or component will be consistent with the capacities and capabilities of the designated maintenance levels.

c. Section Ill lists the tools and test equipment (both special tools and common tool sets) required for each maintenance function as referenced from Section Il.

d. Section IV contains supplemental instructions and explanatory notes for a particular maintenance function.

B-2. MAINTENANCE FUNCTIONS.

Maintenance functions will be limited to and defined as follows:

a. **Inspect.** To determine the serviceability of an item by comparing its physical, mechanical, and/or electrical characteristics with established standards through examination (e.g., by sight, sound, or feel).

b. **Test.** To verify serviceability by measuring the mechanical, pneumatic, hydraulic, or electrical characterist of an item and comparing those characteristics with prescribed standards.

c. **Service.** Operations required periodically to keep an item in proper operating condition, i.e., to clean (includes decontaminate, when required), to preserve, to drain, to paint, or to replenish fuel, lubricants, chemical fluids, or gases.

d. **Adjust.** To maintain or regulate, within prescribed limits, by bringing into proper or exact position, or by setting the operating characteristics to specified parameters.

e. **Aline.** To adjust specified variable elements of an item to bring about optimum or desired performance.

f. **Calibrate.** To determine and cause corrections to be made or to be adjusted on instruments or test, measuring, and diagnostic equipments used in precision measurement. Consists of comparisons of two instruments, one of which is a certified standard of known accuracy, to detect and adjust any discrepancy in the accuracy of the instrument being compared.

g. **Remove/Install** To remove and install the same item when required to perform service or other maintenance functions. Install may be the act of emplacing, seating, or fixing into position a spare, repair part, or module (component or assembly) in a manner to allow the proper functioning of an equipment or system.

h. **Replace.** To remove an unserviceable item and install a serviceable counterpart in its place. “Replace” is authorized by the MAC and is shown as the third position of the SMR code.

i. **Repair.** The application of maintenance services, including fault location/troubleshooting, removal/Installation, and disassembly/assembly procedures and maintenance actions to identify troubles and restore serviceability to an item by correcting specific damage, fault, malfunction, or failure in a part, subassembly, module (component or assembly), end item, or system.

B-2. MAINTENANCE FUNCTIONS (Con't).

j. **Overhaul.** That maintenance effort (service/action) prescribed to restore an item to a completely serviceable/operationnal condition as required by maintenance standards in appropriate technical publications (i.e., DMWR). Overhaul is normally the highest degree of maintenance performed by the Army. Overhaul does not normally return an item to like new condition.

k. **Rebuild.** Consists of those services/actions necessary for the restoration of unserviceable equipment to a like new condition accordance with original manufacturing standards. Rebuild is the highest degree of materiel maintenance applied to Army equipment. The rebuild operation includes the act of returning to zero those age measurements (hours/miles, etc.) considered in classifying Army equipment/components.

B-3. EXPLANATION OF COLUMNS IN THE MAC, SECTION II.

a. **Column 1, Group Number.** Column 1 lists functional group code numbers, the purpose of which is to identify maintenance significant components, assemblies, subassemblies, and modules with the next higher assembly. End item group number shall be "00."

b. **Column 2, Component/Assembly.** Column 2 contains the names of components, assemblies, subassemblies, and modules for which maintenance is authorized.

c. **Column 3, Maintenance Function.** Column 3 lists the functions to be performed on the item listed in Column 2. (For a detailed explanation of these functions, refer to paragraph B-2.)

d. **Column 4, Maintenance Level.** Column 4 specifies, by the listing of a *work time* figure in the appropriate subcolumn(s), the level of maintenance authorized to perform the function listed in Column 3. This figure represents the active time required to perform that maintenance function at the indicated level of maintenance. If the number or complexity of the tasks within the listed maintenance function vary at different maintenance levels, appropriate work time figures will be shown for each level. The work time figure represents the average time required to restore an item (assembly, subassembly, component, module, end item, or system) to a serviceable condition under typical field operating conditions, This time includes preparation time (including any necessary disassembly/assembly time), troubleshooting/fauit location time, and quality assurance/quailty control time in addition to the time required to perform the specific tasks identified for the maintenance functions authorized in the Maintenance Allocation Chart. The symbol designations for the various maintenance levels are as follows:

C ..... Unit (Operator or Crew)
O... . . Unit (Organizational) Maintenance
F ..... Direct Support Maintenance
H ..... General Support Maintenance
D ..... Depot Maintenance

e. **Column 5, Tools and Equipment.** Column 5 specifies, by code, those common tool sets (not individual tools) and special tools, TMDE, and support equipment required to perform the designated function.

f. **Column 6, Remarks.** This column shall, when applicable, contain a letter code, in alphabetic order, which shall be keyed to the remarks contained in Section IV.

B-4. EXPLANATION OF COLUMNS IN TOOL AND TEST EQUIPMENT REQUIREMENTS, SECTION III.

a. **Column 1, Tool or Test Equipment Reference Code.** The tool and test equipment reference code correlates with a code used in the MAC, Section II, Column 5.

b. **Column 2, Maintenance Level.** The lowest level of maintenance authorized to use the tool or test equipment.

B-4. EXPLANATION OF COLUMNS IN TOOL AND TEST EQUIPMENT REQUIREMENTS, SECTION III (Con't).

c. **Column 3, Nomenclature.** Name or identification of the tool or test equipment.

d. **Column 4, National/NATO Stock Number. The** National or NATO Stock Number of the tool or test equipment.

e. **Column 5, Tool Number. The** manufacturer's part number.

B-5. EXPLANATION OF COLUMNS IN REMARKS, SECTION IV.

a. **Column 1, Reference Code. The** code recorded in Column 6, Section II.

b. **Column 2, Remarks. This** column lists information pertinent to the maintenance function being performed as indicated in the MAC, Section II.

Section II. MAINTENANCE ALLOCATION CHART

(1)	(2)	(3)	(4) Maintenance Level					(5)	(6)
			Unit		DS	GS	Depot		
Group Number	Component/Assembly	Maintenance Function	C	O	F	H	D	Tools and Equipment	Remarks
06	**ELECTRICAL SYSTEM**								
0609	*Lights*								
	Composite Light Assembly	Inspect	0.1						
		Replace		0.2				1	
		Repair		0.5				1	
0613	*Hull or Chassis Wiring Harness*								
	Chassis Wiring Harness and Intervehicular Cable	Inspect	0.1						
		Test		1.0				2	
		Service	0.2						
		Replace		1.5				1	
		Repair		1.0				1,2	
11	**REAR AXLE**								
1100	*Rear Axle*								
	Bogie Assembly	Inspect	0.2						
		Remove/ Install			6.0			1,3	
	Axle Assemblies	Service		0.5					
		Replace			3.0			1,3	
	Trunnion Axle	Service		0.1					
		Replace			3.0			1,3	

Section II. MAINTENANCE ALLOCATION CHART (Con't)

(1) Group Number	(2) Component/Assembly	(3) Maintenance Function	(4) Maintenance Level: Unit C	Unit O	DS F	GS H	Depot D	(5) Tools and Equipment	(6) Remark
12	**BRAKES**								
1201	*Handbrakes*	Test	0.1						
		Service		0.1					
		Adjust	0.5						
		Repair		3.2				1,2	
1202	*Service Brakes*	Adjust		0.5				1	
		Replace		4.0				1,2	
		Repair		3.2				1,2	
	Brakeshoes	Replace		0.5				1,2	
1204	*Hydraulic Brake System*								
	Master Cylinder Assembly	Inspect	0.1						
		Service		0.1				1	
		Replace		1.0				1,2	
	Lines and Fittings	Inspect	0.1						
		Replace		3.0				1,2	
	Brake Actuator Assembly	Test	0.1						
		Service		0.1				1	
		Replace		0.5				1,2	
		Repair		2.0				1,2	
1208	*Airbrake System*								
	Air Filter	Service		0.1				1	
		Replace		0.1				1	
		Repair		0.5				1	
	Lines and Fittings	Inspect	0.1						
		Test		0.6				1	
		Service	0.1						
		Replace		2.0				1	
	Relay Valve	Replace		1.0				1	
	Air Reservoir	Inspect	0.1						
		Service	0.1					1	
		Replace		1.0				1	
	Air Tank Drain Cable	Replace		0.5				1	
	Airbrake Chamber	Replace		1.0				1	
		Repair		2.0				1,2	

Section II. MAINTENANCE ALLOCATION CHART (Con't)

(1) Group Number	(2) Component/Assembly	(3) Maintenance Function	(4) Maintenance Level: Unit C	Unit O	DS F	GS H	Depot D	(5) Tools and Equipment	(6) Remarks
13	**WHEELS AND TRACKS**								
1311	*Wheel Assembly*	Inspect	0.2						
		Service		0.5					
		Replace		0.5				1,2	
	Brakedrum	Replace		2.0				1,2	
	Wheel Bearings	Service		2.0				1,2	
		Replace		2.0				1,2	
1313	*Tires, Tubes, Tire Chains*								
	Tires	Inspect	0.1						
		Replace		0.5				2	
		Repair			1.0				
15	**FRAME, TOWING ATTACHMENTS, DRAWBARS, AND ARTICULATION SYSTEMS**								
1501	*Frame Assembly*								
	Step Plate	Replace		0.2				1	
1503	*Pint/es and Towing Attachments*								
	Towing Lunette	Inspect	0.1						
		Replace			2.0			4,5	
	Reach Tube	Service		0.1					
		Replace		2.0				1,2	
1504	*Spare Wheel Carrier and Tire Lock*								
	Spare Tire Carrier	Service		0.1					
		Replace		2.0				1	
1507	*Landing Gear, Leveling Jacks*								
	Leveling Jacks	Inspect	0,1						
		Replace		1.0				1,2	
16	**SPRINGS AND SHOCK ABSORBERS**								
1601	*Springs*	Replace			6.0			1,3	
	Spring Bumper	Replace		0.1				1	

Section II. MAINTENANCE ALLOCATION CHART (Con't)

(1) Group Number	(2) Component/Assembly	(3) Maintenance Function	(4) Maintenance Level: Unit C	Unit O	DS F	GS H	Depot D	(5) Tools and Equipment	(6) Remarks
18	**BODY CAB, HOOD, AND HULL**								
1801	*Body, Cab, Hood, and Hull Assemblies*								
	Covers	Replace		0.2				1	
22	**BODY CHASSIS, AND HULL ACCESSORY ITEMS**								
2202	*Accessory Items*								
	Reflectors	Inspect	**0.1**						
		Replace		0.5				1	
	Wheel Chock and Holder Assembly	Replace		0.5				1	
		Repair		0.5				1	
	Hook, Cargo Cover	Replace		0.1				1	
2210	*Data Plates and Instruction Holders*								
	Data Plates	Replace		0.5				1	
47	**GAGES (NONELECTRICAL), WEIGHING AND MEASURING DEVICES**								
4701	*Instruments*								
	Odometer Drive Shaft	Replace		1.2				1	

SECTION III. TOOL AND TEST EQUIPMENT REQUIREMENTS

(1) TOOL OR TEST EQUIPMENT REFERENCE CODE	(2) MAINTENANCE LEVEL	(3) NOMENCLATURE	(4) NATIONAL/NATO STOCK NUMBER	(5) TOOL NUMBER
1	O	TOOL KIT, GENERAL MECHANIC'S, AUTOMOTIVE	5180-00-177-7033	
2	O	SHOP EQUIPMENT, AUTOMOTIVE MAINTENANCE AND REPAIR; ORGANIZATIONAL MAINTENANCE, COMMON NO. 1, LESS POWER	4910-00-754-0654	
3	F	SHOP EQUIPMENT, AUTOMOTIVE MAINTENANCE AND REPAIR: FIELD MAINTENANCE, BASIC, LESS POWER	4910-00-754-0705	
4	F	SHOP EQUIPMENT, WELDING, FIELD MAINTENANCE	3470-00-357-7268	
5	F	TOOL KIT, WELDER'S	5810-00-754-0661	

SECTION IV. REMARKS

NOT APPLICABLE

APPENDIX C
COMPONENTS OF END ITEM AND BASIC ISSUE ITEMS LISTS

The XM979, XM1061, M1061A1, and XM1073 trailers currently do not have Components of End Hem or Basic Issue Items Lists assigned.

APPENDIX D
ADDITIONAL AUTHORIZATION LIST

The XM979, XM1061, M1061A1, and XM1073 trailers currently do not have an Additional Authorization List assigned.

APPENDIX E
EXPENDABLE/DURABLE SUPPLIES AND MATERIALS LIST

Section I. INTRODUCTION

E-1. SCOPE.

This appendix lists expendable/durable supplies and materials you will need to operate and maintain the XM979, XM1061, M1061A1, and XM1073 trailers. This listing is for informational purposes only and is not authority to requisition the listed items. These items are authorized to you by CTA 50-970, *Expendable/Durable Iterns (Except Medical, Class V, Repair Parts, and Heraldic Items)* or CTA 8-100, *Army Medical Department Expendable/Durable Items.*

E-2. EXPLANATION OF COLUMNS.

a. **Column (1) – Item Number.** This number is assigned to the entry in the listing and is referenced in the "Initial Setup" of maintenance paragraphs or narrative instructions to identify the material needed (e.g., Dry cleaning solvent, Item 14, Appendix E).

b. **Column (2) – Level.** This column identifies the lowest level of maintenance that requires the listed item.

C - Operator/Crew
O - Organizational Maintenance
F - Direct Support Maintenance
H - General Support Maintenance

c. Column (3) – National Stock Number. This is the National Stock Number assigned to the item. Use it to request or requisition the item.

d. **Column (4) – Description.** Indicates the Federal item name and, if required, a description to identify the item. The last line for each item indicates the Commercial and Government Entity (CAGE) code, in parentheses, followed by the part number.

e. **Column (5) – Unit of Measure (U/M).** Indicates the measure used in performing the actual maintenance function. This measure is expressed by a two-character alphabetical abbreviation (e.g., ea, in., pr). If the unit of measure differs from the unit of issue, requisition the lowest unit of issue that will satisfy your requirements.

SECTION II. EXPENDABLE/DURABLE SUPPLIES AND MATERIALS LIST

(1)	(2)	(3)	(4)	(5)
ITEM NUMBER	LEVEL	NATIONAL STOCK NUMBER	DESCRIPTION (CAGE) PART NUMBER	U/M
1	O		BARRIER MATERIAL; GREASEPROOF, WATERPROOFED, FLEXIBLE (81349) MIL-B-121	
		8135-00-171-0930	100 YARD ROLL	YD
2	C		BRUSH: SCRUB (81349) H-B-1490	
		7920-00-061-0038		EA
3	O		CLEANING COMPOUND: SOLVENT (81349) MIL-C-18718	
		6850-00-597-9765	1 GALLON CAN	GL
4	C		CLOTH: CLEANING (83799) S0SE31-40983	
		7920-00-521-8874	100 FOOT ROLL	EA
5	O		COMPOUND: SEALING (05972) 262-41	
		8030-01-142-3131	250 CC BOTTLE	BT
6	C		DETERGENT: GENERAL PURPOSE, LIQUID (81349) MIL-D-16791	
		7930-00-282-9699	1 GALLON CAN	GL
7	O		FLUID: BRAKE, SILICONE, AUTOMOTIVE (81349) MIL-B-46176	
		9150-01-102-9455	1 GALLON CAN	GL
		9150-01-123-3152	5 GALLON CAN	GL
		9150-01-072-8379	55 GALLON DRUM	GL
8	O		GREASE: AUTOMOTIVE AND ARTILLERY (81349) MIL-G-10924	
		9150-00-935-1017	14 OUNCE CARTRIDGE	OZ
		9150-00-190-0904	1.75 POUND CAN	LB
		9150-00-190-0905	6.5 POUND CAN	LB
		9150-00-190-0907	35 POUND CAN	LB

SECTION II. EXPENDABLE/DURABLE SUPPLIES AND MATERIALS LIST (CON'T)

(1)	(2)	(3)	(4)	(5)
ITEM NUMBER	LEVEL	NATIONAL STOCK NUMBER	DESCRIPTION (CAGE) PART NUMBER	U/M
9	O		OIL: LUBRICATING, GENERAL PURPOSE, PL-M (81349) MIL-L-3150	
		9150-00-231-2361	1 QUART CAN	QT
10	O		OIL: LUBRICATING, GENERAL PURPOSE, PL-S (81348) V-VL-800	
		9150-00-231-6689	1 QUART CAN	QT
11	O		PAPER: ABRASIVE (61585) OFTI 9	
		5350-01-240-8401	600 GRIT	EA
12	C		RAG: WIPING, COTTON AND COTTON-SYNTHETIC (58536) A-A-531	
		7920-00-205-1711	50 POUND BALE	LB
13	O		SOLDER: LEAD ALLOY (81348) QQ-S-571	
		3439-00-265-7102	1 POUND ROLL	LB
14	C		SOLVENT: DRY CLEANING, TYPE II (81349) P-D-680	
		6850-00-664-5685	1 QUART CAN	QT
		6850-00-281-1985	1 GALLON CAN	GL
		6850-00-285-8011	55 GALLON DRUM	GL
15	O		STRAP: TIE-DOWN, ELECTRICAL COMPONENTS (96906) MS3367-1-9	
		5975-00-074-2072	BOX OF 100	EA
16	O		TAG: MARKER (81349) MIL-T-12755	
		9905-00-537-8954	50 EACH	EA

(1)	(2)	(3)	(4)	(5)
ITEM NUMBER	LEVEL	NATIONAL STOCK NUMBER	DESCRIPTION (CAGE) PART NUMBER	U/M
17	O		TAPE, ANTISEIZING:	
			1/4 IN. WIDTH (71643) TEMPRTH	
		8030-00-067-7368	54 FEET LONG	FT
			1/2 IN. WIDTH (81349) MIL-T-27730	
		8030-00-889-3535	260 INCH ROLL	IN.
18	O		TAPE: INSULATION, ELECTRICAL (81348) HH1510	
		5970-00-198-8621	85 FOOT ROLL	FT

APPENDIX F
REPAIR PARTS AND SPECIAL TOOLS LISTS

Section I. INTRODUCTION

F-1. SCOPE.

This RPSTL lists and authorizes spares and repair parts; special tools; special test, measurement, and diagnostic equipment (TMDE); and other special support equipment required for performance of organizational, direct support, and general support maintenance of the Trailers. It authorizes the requisitioning, issue, and disposition of spares, repair parts and special tools as indicated by the source, maintenance and recoverability (SMR) codes.

F-2. GENERAL.

In addition to Section 1, *Introduction,* this Repair Parts and Special Tools List is divided into the following sections:

a. Section II. Repair Parts List. A list of spares and repair parts authorized by this RPSTL for use in the performance of maintenance. The list also includes parts which must be removed for replacement of the authorized parts. Parts lists are composed of functional groups in ascending alphanumeric sequence, with the parts in each group listed in ascending figure and item number sequence, Bulk materiels are listed in item name sequence. Repair parts kits are listed separately in their own functional group within Section II. Repair parts for reparable special tools are also listed in this section. Items listed are shown on the associated illustration(s)/figure(s).

b. **Section III. Special Tools List.** A list of special tools, special TM DE, and other special support equipment authorized by this RPSTL [as indicated by Basis of Issue (BOI) information in the *DESCRIPTION AND USABLE ON CODE* column] for the performance of maintenance.

c. **Section IV. Cross-reference Indexes.** A list, in National Item Identification Number (NIIN) sequence, of all National stock numbered items appearing in the listing, followed by a list in alphanumeric sequence of all part numbers appearing in the listings. National stock numbers and part numbers are cross-referenced to each illustration/figure and item number appearance. The figure and item number index lists figure and item numbers in alphanumeric sequence and cross-references NSN, CAGE, and part numbers.

F-3. EXPLANATION OF COLUMNS (SECTIONS II AND III).

a. ITEM NO. **[Column (1)].** Indicates the number used to identify items called out in the illustration.

b. SMR CODE **[Column (2)].** The Source, Maintenance, and Recoverability (SMR) code is a 5-position code containing supply/requisitioning information, maintenance category authorization criteria, and disposition instruction, as shown in the following breakout:

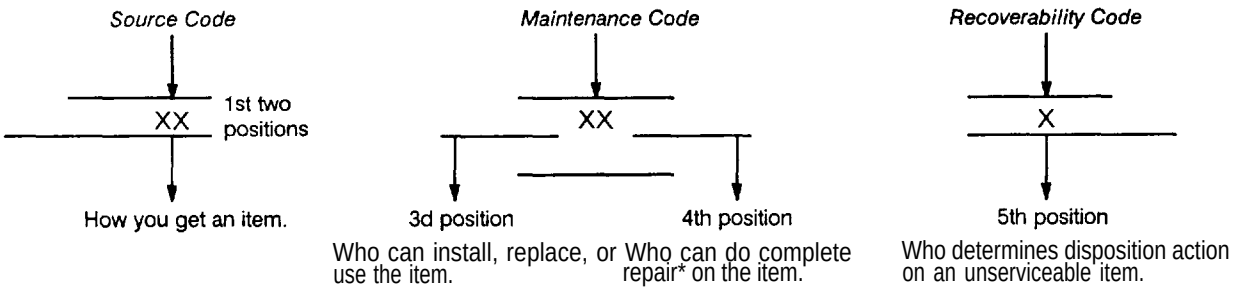

**Complete Repair:* Maintenance capacity, capability, and authority to perform all corrective maintenance tasks of the *"Repair"* function in a use / user environment in order to restore serviceability to a failed item.

F-3. EXPLANATION OF COLUMNS (SECTIONS II AND III) (Con't).

(1) **Source Code.** The source code tells you how to get an item needed for maintenance, repair, or overhaul of an end item/equipment. Explanations of source codes follow:

Code	*Application/Explanation*
PA PB PC** PD PE PF PG	Stocked items; use the applicable NSN to request/requisition items with these source codes. They are authorized to the category indicated by the code entered in the 3d position of the SMR code. *"" Items coded PC are subject* **to** *deterioration.*
KD KF KB	Items with these codes are not to be requested/requisitioned individually. They are part of a kit which is authorized to the maintenance category indicated in the 3d position of the SMR code. The complete kit must be requisitioned and applied.
MO - Made at UMIAVUM Level *MF - Made at DS/AVIM Level* *MH - Made at GS Level* *MD - Made at Depot*	Items with these codes are not to be requested/requisitioned individually. They must be made from bulk materiel which is identified by the part number in the *DESCRIPTION AND USABLE ON CODE (UOC)* column and listed in the bulk materiel group of the repair parts list in this RPSTL. If the item is authorized to you by the 3d position code of the SMR code, but the source code indicates it is made at a higher level, order the item from the higher level of maintenance.
AO - Assembled by UM/AVUM Level *AF - Assembled by DS/A VIM' Level* *AH - Assembled by GS Level* *AD - Assembled at Depot*	Items with these codes are not to be requested/requisitioned individually. The parts that make up the assembled item must be requisitioned or fabricated and assembled at the level of maintenance indicted by the source code. if the 3d position code of the SMR code authorizes you to repace the item, but the source code indicates that the item is assembled at a higher level, order the item from the higher level of maintenance.

NOTE

Cannibalization or controlled exchange, when authorized, may be used as a source of supply for items with the above source codes, except for those source coded "XA."

XA **-** DO NOT requisition an WY-coded item. Order its next higher assembly.

XB - If an "XB" item is not available from salvage, order it using the CAGE and part number given.

F-3. EXPLANATION OF COLUMNS (SECTIONS II AND III) (Con't).

XC - Installation drawing, diagram, instruction sheet, field service drawing, that Is identified by manufacturer's part number.

XD - Item is not stocked. Order an "XD"-coded item through normal supply channels using the CAGE and part number given, if no NSN is available.

(2) **Maintenance Code.** Maintenance codes tell you the level(s) of maintenance authorized to use and repair support items. The maintenance codes are entered in the third and fourth positions of the SMR code as follows:

(a) The maintenance code entered in the third position tells you the lowest maintenance level authorized to remove, replace, and use an item. me maintenance code entered in the third position will indicate authorization to one of the following levels of maintenance.

Code	*Application/Explanation*
C	Crew or operator maintenance done within unit maintenance or aviation unit maintenance.
O	Unit maintenance or aviation unit can remove, replace, and use the item.
F	Direct support or aviation intermediate level can remove, replace, and use the item.
H	General support level can remove, replace, and use the item.
L	Specialized repair activity can remove, replace, and use the item.
D	Depot level can remove, replace, and use the item.

NOTE

Some limited repair may be done on the Item at a lower level of maintenance, If authorized by the Maintenance Allocation Chart (MAC) and SMR codes.

(b) The maintenance code entered in the fourth position tells whether or not the item is to be repaired and identifies the lowest maintenance level with the capability to do complete repair (i.e., perform all authorized *"Repair"* functions). This position will contain one of the following maintenance codes:

Code	*Application/Explanation*
o	- Unit maintenance or aviation unit is the lowest level that can do complete repair of the item.
F	- Direct support or aviation intermediate is the lowest level than can do complete repair of the item.
H	- General support is the lowest Ievel that can do complete repair of the item.
L	– Specialized repair activity is the lowest level that can do complete repair of the item.
D	- Depot is the lowest level that can do complete repair of the item.
Z	- Nonreparable. No repair is authorized.
B	- No repair is authorized. (No parts or special tools are authorized for the maintenance of a "B"-coded item.) However, the item may be reconditioned by adjusting, lubricating, etc., at the user level.

F-3. EXPLANATION OF COLUMNS (SECTIONS II AND III) (Con't).

(3) Recoverability Code. Recoverability codes are assigned to items to indicate the disposition action on unserviceable items. The recoverability code is entered in the fifth-position of the SMR code as follows:

Code	*Application/Explanation*
Z	- Nonreparable item. When unserviceable, condemn and dispose of the item at the level of maintenance shown in the 3d position of the SMR code.
O	- Reparable item. When uneconomically reparable, condemn and dispose of the item at unit maintenance or aviation unit level.
F	- Reparable item. When uneconomically reparable, condemn and dispose of the item at the direct support or aviation intermediate level.
H	- Reparable item. When uneconomically reparable, condemn and dispose of the item at the general support level.
D	– Reparable item. When beyond lower level repair capability, return to depot. Condemnation and disposal of item not authorized below depot level.
L	Reparable item. Condemnation and disposal of item not authorized below specialized repair activity (SRA).
A	– Item requires special handling or condemnation procedures because of specific reasons (e.g., precious metal content, high dollar value, critical material, or hazardous material). Refer to appropriate manuals/directives for specific instructions,

c. CAGEC [Column (3)]. The Commercial and Government Entity (CAGE) Code (C) is a 5-digit alphanumeric code which is used to identify the manufacturer, distributor, or Government agency, etc., that supplies the item.

NOTE

When you use an NSN to requisition an item, the Item you receive may have a different part number from the part ordered.

d. PART NUMBER [Column (4)]. Indicates the primary number used by the manufacturer (individual, company, firm, corporation, or Government activity), which controls the design and characteristics of the item by means of its engineering drawings, specifications standards, and inspection requirements to identify an item or range of items,

e. DESCRIPTION AND USABLE ON CODE (UOC) [Column (5)]. This column includes the following information:

(1) The Federal item name and, when required, a minimum description to identify the item.

(2) Physical security classification, Not Applicable.

(3) Items that are included in kits and sets are listed below the name of the kit or set on Figure KIT.

(4) Spare/repair parts that make up an assembled item are listed immediately following the assembled item line entry.

(5) Part numbers for bulk materiels are referenced in this column in the line item entry for the item to be manufactured/fabricated.

(6) When the item is not used with all serial numbers of the same model, the effective serial numbers are shown on the last line(s) of the description (before UOC). Not Applicable.

(7) The usable on code, when applicable (see paragraph F-5, Special Information).

F-3. EXPLANATION OF COLUMNS (SECTIONS II AND III) (Con't).

(8) In the Special Tools List section, the Basis of Issue (BOI) appears as the last line(s) in the entry for each special tool, special TMDE, and other special support equipment. When density of equipments supported exceeds density spread indicated in the Basis of Issue, the total authorization is increased proportionately.

(9) The statement "END OF FIGURE appears just below the last item description in Column 5 for a given figure in both Section II and Section III.

f. **QTY [Column (6)].** The QTY (quantity per figure) column indicates the quantity of the item used in the breakout shown on the illustration/figure, which is prepared for a functional group, subfunctional group, or an assembly. A "V" appearing in this column in lieu of a quantity indicates that the quantity is variable and the quantity may vary from application to application.

F-4. EXPLANATION OF COLUMNS (SECTION IV).

a. **National Stock Number (NSN) Index.**

(1) *STOCK NUMBER* column. This column lists the NSN by National Item Identification Number (NIIN) sequence. The NIIN consists of the last nine digits of the NSN (i.e., 5305-01-6 74-1467). When using this column to locate an item, ignore the first 4 digits of the NSN. However, the complete NSN should be used when ordering items by stock number.

(2) *FIG.* **column,** This column lists the number of the figure where the item is identified/located. The figures are in numerical order in Section II and Section Ill.

(3) *ITEM* **column.** The item number identifies the item associated with the figure listed in the adjacent FIG. column. This item is also identified by the NSN listed on the same line.

b. Part Number Index, Part numbers in this index are listed by part number in ascending alphanumeric sequence (i.e., vertical arrangement of letter and number combination which places the first letter or digit of each group in order A through Z, followed by the numbers O through 9 and each following letter or digit in like order).

(1) CAGEC **column.** The Commercial and Government Entity (CAGE) Code (C) is a 5-digit alphanumeric code used to identify the manufacturer, distributor, or Government agency, etc., that supplies the item.

(2) *PART NUMBER* **column.** Indicates the primary number used by the manufacturer (individual, firm, corporation, or Government activity), which controls the design and characteristics of the item by means of its engineering drawings, specifications standards and inspection requirements to identify an item or range of items.

(3) *STOCK NUMBER* **column.** This column lists the NSN for the associated part number and manufacturer identified in the PART NUMBER and CAGE columns to the left.

(4) *FIG.* **column.** This column lists the number of the figure where the item is identified/located in Section II and Section III.

(5) *ITEM* **column.** The item number is that number assigned to the item as it appears in the figure referenced in the adjacent figure number column.

c. Figure and Item Number Index.

(1) *FIG.* **column.** This column lists the number of the figure where the item is identified/located in Sections II and Ill.

(2) *ITEM* **column** The item number is that number assigned to the item as it appears in the figure referenced in the adjacent figure number column.

(3) *STOCK NUMBER* **column.** This column lists the NSN for the item.

F-4. EXPLANATION OF COLUMNS (SECTION IV) (Con't).

(4) *CAGE* **column.** The Commercial and Government Entity (CAGE) is a 5-digit alphanumeric code used to identify the manufacturer, distributor, or Government agency, etc., that supplies the item.

(5) *PART NUMBER* **column.** Indicates the primary number used by the manufacturer (individual, firm, corporation, or Government activity), which controls the design and characteristics of the item by means of its engineering drawings, specifications standards and inspection requirements to identify an item or range of items.

F-5. SPECIAL INFORMATION.

a. **Usable On Code.** The usable on code appears in the lower left corner of the Description column heading. Usable on codes are shown as "UOC: . . . . . " in the Description column (justified left) on the first line applicable item description/nomenclature. Uncoded items are applicable to all models. Identification of the usable on codes used in this RPSTL are:

Code	*Used On*
731	XM979
732	XM1061
733	M1061A1
734	XM1073

b. **Fabrication Instructions.** Bulk materiels required to manufacture items are listed in the Bulk Materiel Functional Group of this RPSTL. Part numbers for bulk materiels are also referenced in the DESCRIPTION column of the line item entry for the item to "be manufactured/fabricated. Detailed fabrication instructions for items source coded to be manufactured or fabricated are found in *Appendix G* of this manual.

c. **Assembly Instructions.** Detailed assembly instructions for items source coded to be assembled from component spare/repair parts are found in *Chapters 4 and 5* of this manual. Items that makeup the assembly are listed immediately following the assembly item entry or reference is made to an applicable figure.

d. **Kits.** Line item entries for repair parts kits appear in group 9401 in Section II. Not Applicable.

e. **Index Numbers.** Items which have the word BULK in the FIG. column will have an index number shown in the item column. This index number is a cross-reference between the National Stock Number/Part Number Index and the bulk materiel list in Section II.

F-6. HOW TO LOCATE REPAIR PARTS.

a. **When National Stock Number or Part Number is Not Known:**

(1) **First.** Using the Table of Contents, determine the assembly group or subassembly group to which the item belongs. This is necessary since figures are prepared for assembly groups and subassembly groups, and listings are divided into the same groups.

(2) **Second.** Find the figure covering the assembly group or subassembly group to which the item belongs.

(3) **Third,** Identify the item on the figure and use the Figure and Item Number Index to find the NSN.

b. **When National Stock Number or Part Number is Known:**

(1) First. Using the National Stock Number or Part Number Index, find the pertinent National Stock Number or Part Number. The NSN Index is in National Item Identification Number (NIIN) sequence [see paragraph F-4a(1)]. The part numbers in the Part Number Index are listed in ascending alphanumeric sequence (see paragraph F-4.b). Both indexes cross-reference you to the illustration/figure and item number of the item you are looking for.

(2) **Second**. Turn to the figure and item number, verify that the item is the one you're looking for, then locate the item number in the repair parts list for the figure.

F-7. ABBREVIATIONS.

For standard abbreviations see MIL-STD-12D, Military Standard Abbreviations for Use on Drawings, Specifications, Standards, and In Technical Documents.

Abbreviations	*Explanation*
NIIN	National Item Identification Number (consists of the last 9 digits of the NSN)
RPSTL	Repair Parts and Special Tools Lists

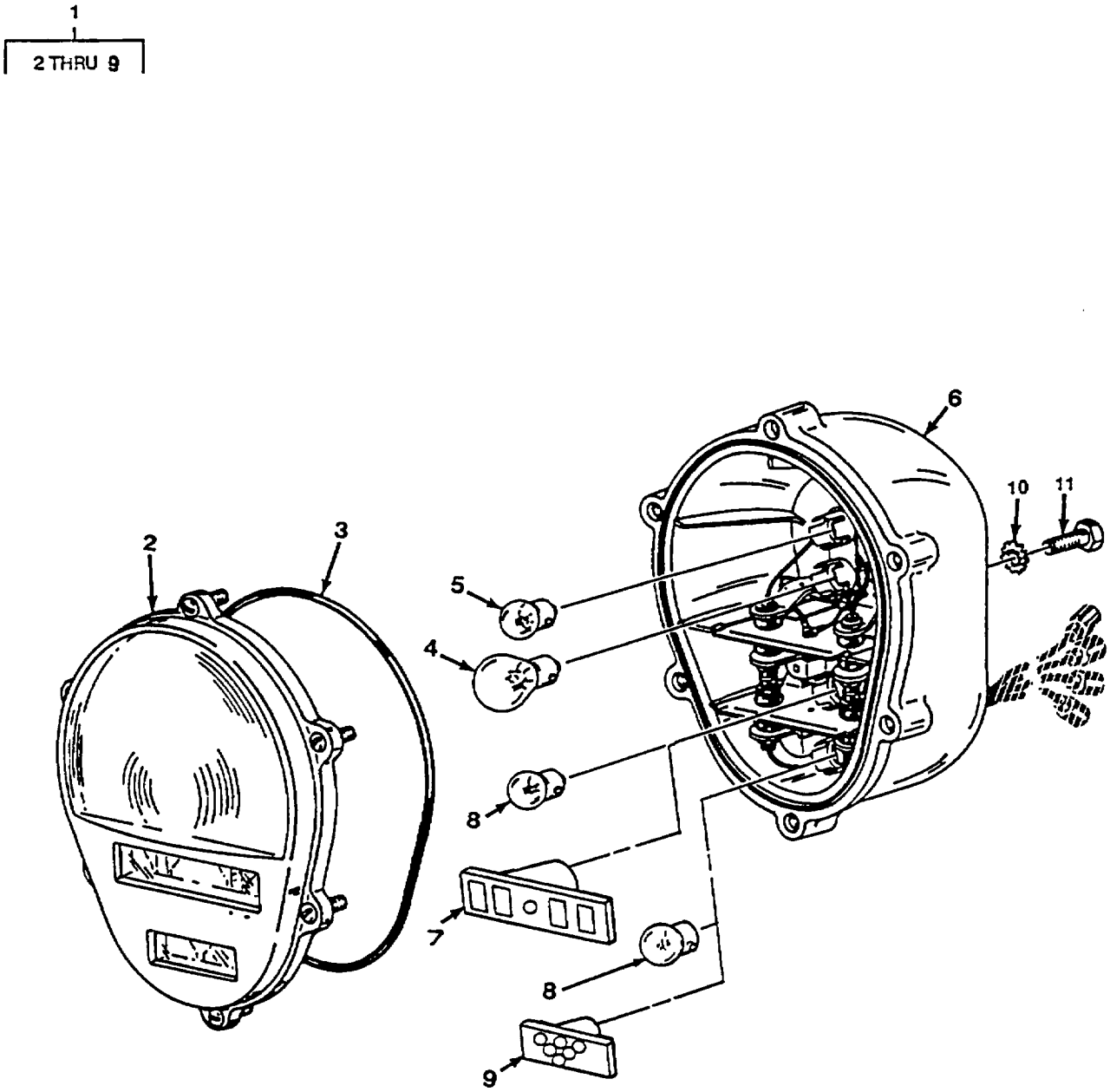

FIGURE 1. COMPOSITE LIGHT ASSEMBLY

(1) ITEM NO	(2) SMR CODE	(3) CAGEC	(4) PART NUMBER	(5) DESCRIPTION AND USABLE ON CODES (UOC)	(6) QTY
				GROUP 06 ELECTRICAL SYSTEM	
				GROUP 0609 LIGHTS	
				FIG. 1 COMPOSITE LIGHT ASSEMBLY	
* 1	PAOOO	19207	12375837	TAILLIGHT, VEHICULAR	2
* 2	PAOZZ	19207	12375841	.LENS, LIGHT	1
3	PAOZZ	19207	11639519-2	.PACKING, PREFORMED	1
4	PAOZZ	96906	MS35478-1683	.LAMP, INCANDESCENT	1
5	PAOZZ	96906	MS15570-623	.LAMP, INCANDESCENT	1
* 6	XAOZZ	19207	12375838	.BODY ASSEMBLY	1
* 7	PAOZZ	19207	12360870-2	.STOP LIGHT, VEHICULA	1
* 8	PAOZZ	96906	MS15570-1251	.LAMP, INCANDESCENT	2
* 9	PAOZZ	19207	12360850-1	.LIGHT, MARKER, CLEARA	1
* 10	PAOZZ	96906	MS35338-46	WASHER, LOCK	4
* 11	PAOZZ	80204	B1821BH038C063N	SCREW, CAP, HEXAGON H	4

END OF FIGURE

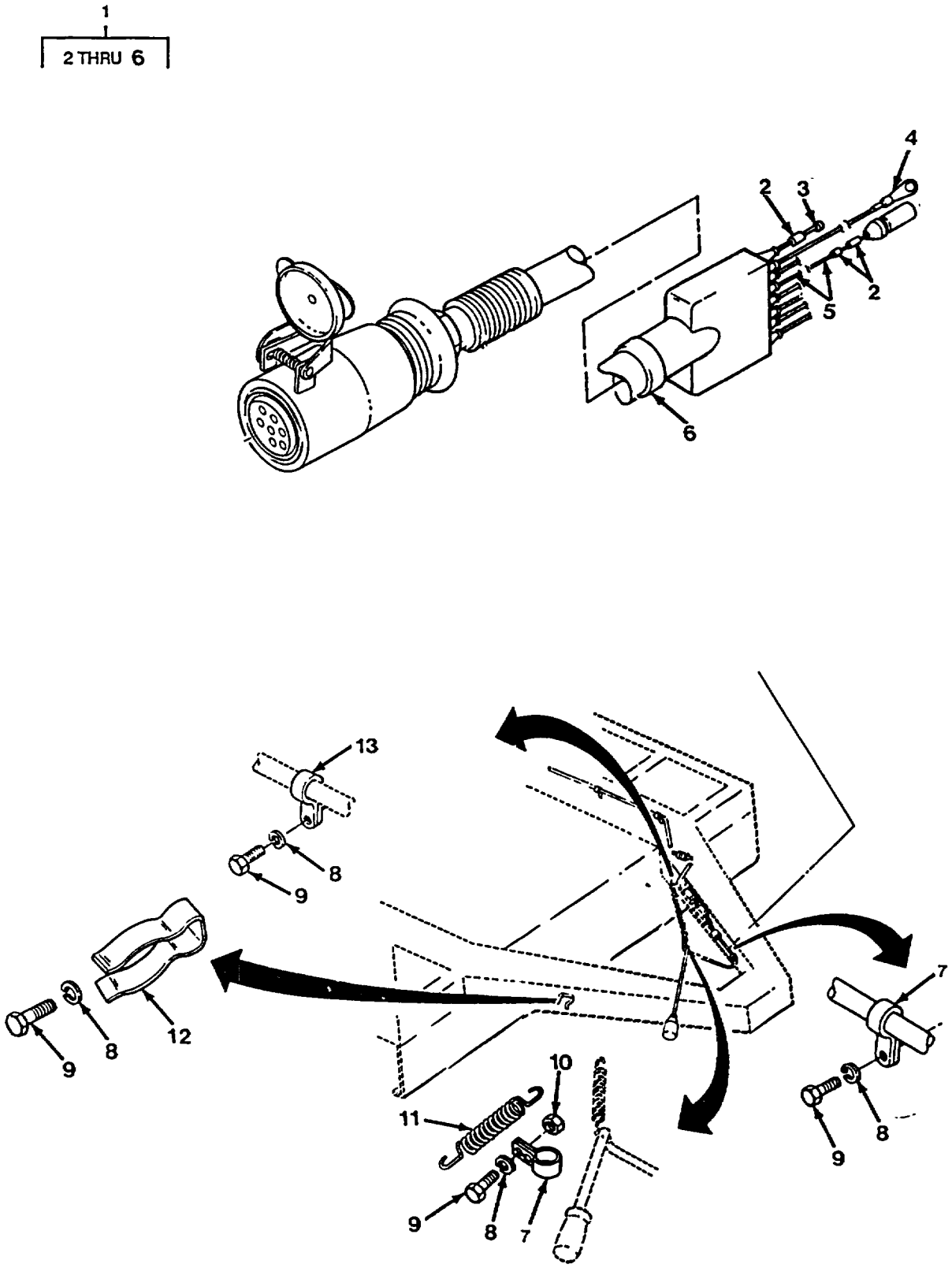

FIGURE 2. INTERVEHICULAR CABLE ASSEMBLY.

	(1) ITEM NO	(2) SMR CODE	(3) CAGEC	(4) PART NUMBER	(5) DESCRIPTION AND USABLE ON CODES (UOC)	(6) QTY
					GROUP 0613 HULL OR CHASSIS WIRING HARNESS	
					FIG. 2 INTERVEHICULAR CABLE ASSEMBLY	
	1	PAOZZ	19207	10891263-1	CABLE ASSEMBLY, SPEC	1
*	2	PAOZZ	81349	M43436/1-1	.BAND, MARKER	12
*	3	PAOZZ	19207	8347216	.CAP, PROTECTIVE, DUST	1
*	4	PAOZZ	96906	MS25036-154	.TERMINAL, LUG	1
*	5	MOOZZ	B81349	M13486/1-5X-5.5	.WIRE, ELECTRICAL MAKE FROM P/N M13486/1-5 (81349) UOC:7319732	V
*	5	MOOZZ	81349	M13486/1-5X7	WIRE, ELECTRICAL MAKE FROM P/N M13486/1-5 (81349) UOC:733, 734	8
*	6	PAOZZ	81349	M43436/1-3	.BAND, MARKER	1
*	7	PAOZZ	96906	MS21333-104	CLAMP, LOOP	2
*	8	PAOZZ	99539	CBM21389	WASHER, LOCK	4
*	9	PAOZZ	96906	MS35206-279	SCREW, MACHINE UOC:731, 732, 733	4
*	9	PAOZZ	96906	MS90725-3	SCREW, CAP, HEXAGON H UOC:734	2
*	10	PAOZZ	96906	MS51967-2	NUT, PLAIN, HEXAGON UOC:731, 732, 733	1
	11	PAOZZ	19207	7001762	SPRING, HELICAL, EXTE UOC:731, 7329733	1
*	12	PAOZZ	19207	8363978	CLIP, SPRING TENSION	1
*	13	PAOZZ	96906	MS21333-107	CLAMP, LOOP	1

END OF FIGURE

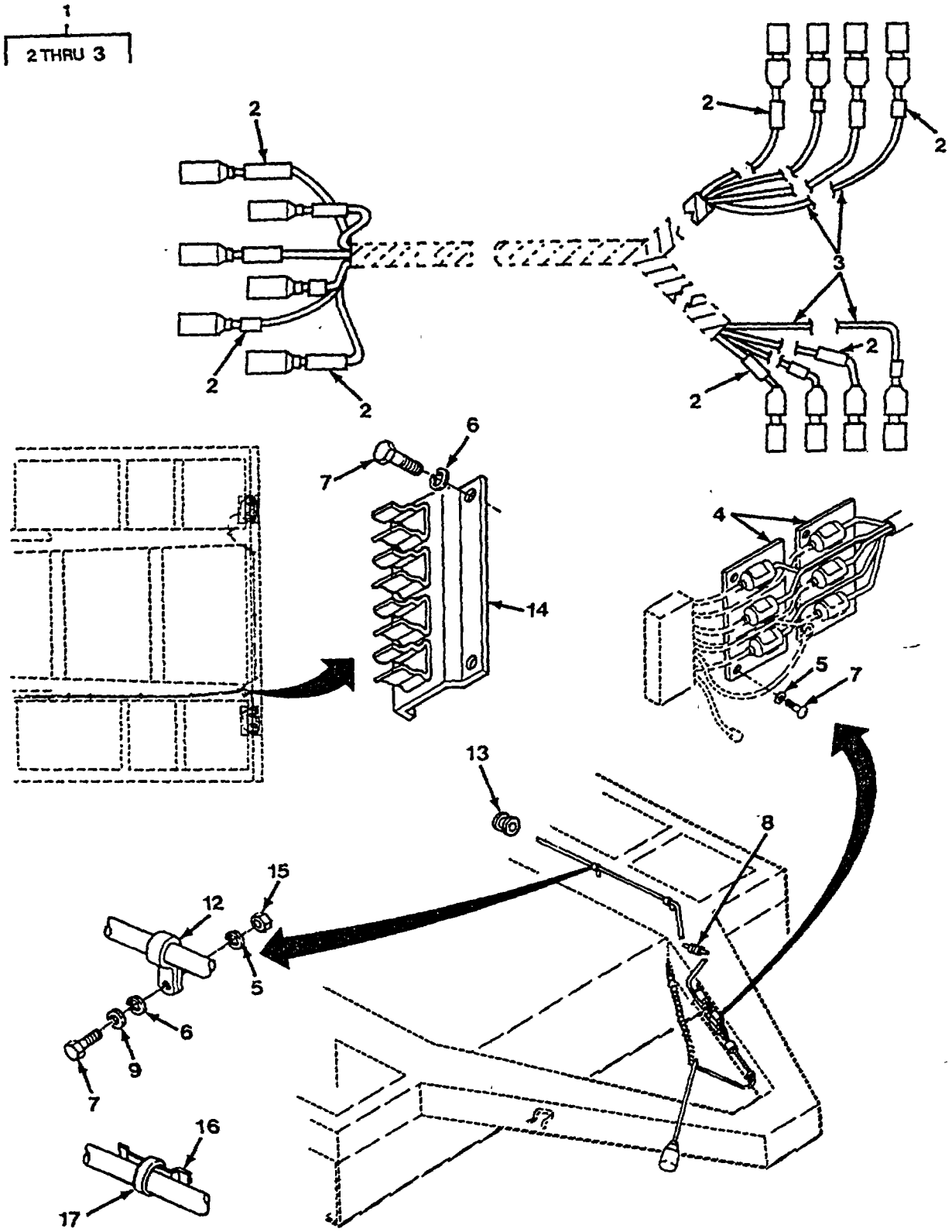

FIGURE 3. WIRING HARNESS.

(1) ITEM NO	(2) SMR CODE	(3) CAGEC	(4) PART NUMBER	(5) DESCRIPTION AND USABLE ON CODES (UOC)	(6) QTY
				GROUP 0613 HULL OR CHASSIS WIRING HARNESS	
				FIG. 3 WIRING HARNESS	
1	PAOOO	19207	11636714-2	WIRING HARNESS, BRAN UOC:734	1
1	PAOOO	19207	11636714	WIRING HARNESS, BRAN UOC:731, 732	1
1	PAOOO	19207	11636714-1	WIRING HARNESS, BRAN UOC:733	1
* 2	PAOZZ	81349	M43436/1-1	.BAND, MARKER.	22
* 3	MOOZZ	81349	M13486/1-5-190	.WIRE, ELECTRICAL MAKE FROM WIRE P/..... N M13486/1-5 (81349) UOC:734	1
* 3	MOOZZ	81349	M13486/1-5-148	.CABLE, SPECIAL PURPO MAKE FROM ..... WIRE P/N M13486/1-5 (81349)..... UOC:731, 732	8
* 3	MOOZZ	81349	M13486/1-5-173	CABLE, SPECIAL PURPO MAKE FROM ..... WIRE P/N M13486/1-5 (81349)..... UOC:733	8
* 4	PAOZZ	19207	8347213	CLIP, SPRING TENSION	2
* 5	PAOZZ	99539	CBM21389	WASHER, LOCK UOC:731, 732, 733	19
* 6	PAOZZ	96906	MS27183-10	WASHER, FLAT..... UOC:731, 732, 733	15
* 6	PAOZZ	99539	C8M21389	WASHER, LOCK UOC:734	8
* 7	PAOZZ	96906	MS35206-279	SCREW, MACHINE UOC:731, 732, 733	19
* 7	PAOZZ	96906	M590725-3	SCREW, CAP, HEXAGON H..... UOC:734	8
* 8	PAOZZ	96906	MS35489-107	GROMMET, NONMETALLIC.....	1
10	PAOZZ	96906	MS51939-1	LOOP, STRAP FASTENER..... UOC:734	11
11	PAOZZ	96906	M53367-3	STRAP, TIEDOWN, ELECT..... UOC:734	11
12	MOOZZ	19207	8724501-AR	STRAP, SUPPORT MAKE FROM STRAP P/N..... 10905840 (19207)..... UOC:731, 732, 733	15
13	PAOZZ	96906	MS35489-81	GROMMET, NONMETALLIC UOC:7317332, 733	2
14	PAOZZ	19207	11636512	BRACKET, MOUNTING	2
15	PAOZZ	96906	MS51967-2	NUT, PLAIN, HEXAGON UOC:731, 732, 733	4

END OF FIGURE

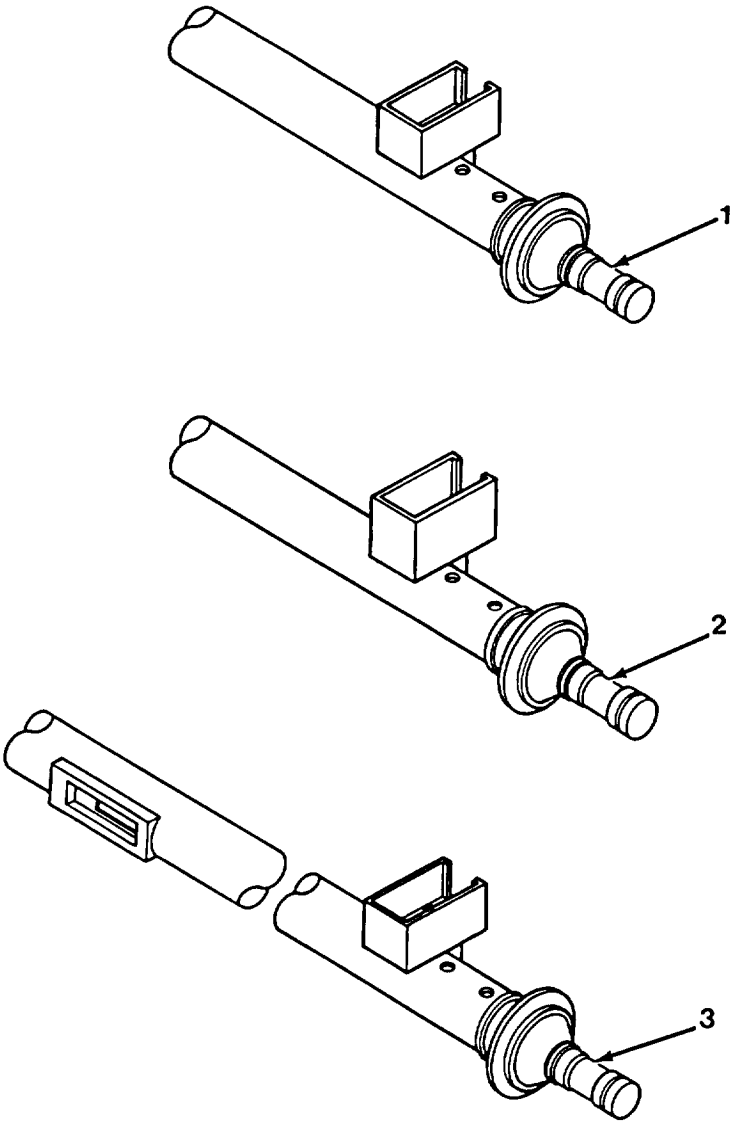

TA507728

FIGURE 4. FRONT AND REAR AXLES.

(1) ITEM NO	(2) SMR CODE	(3) CAGEC	(4) PART NUMBER	(5) DESCRIPTION AND USABLE ON CODES (UOC)	(6) QTY
				GROUP 11 REAR AXLE	
				GROUP 1100 FRONT AND REAR AXLES	
				FIG. 4 FRONT AND REAR AXLES	
1	PBFZZ	19207	12296271	AXLE,VEHICULAR,NOND 731-FRONT; 732-FRONT AND REAR UOC:731,732	1
2	PBFZZ	19207	12331747	AXLE,VEHICULAR,NOND FRONT AND REAR UOC:733	1
2	XDFZZ	19207	12331747-1	AXLE,VEHICULAR,NOND FRONT AND REAR UOC:734	2
3	PBFZZ	19207	12269944	AXLE,VEHICULAR,NOND REAR UOC:731	1
				END OF FIGURE	

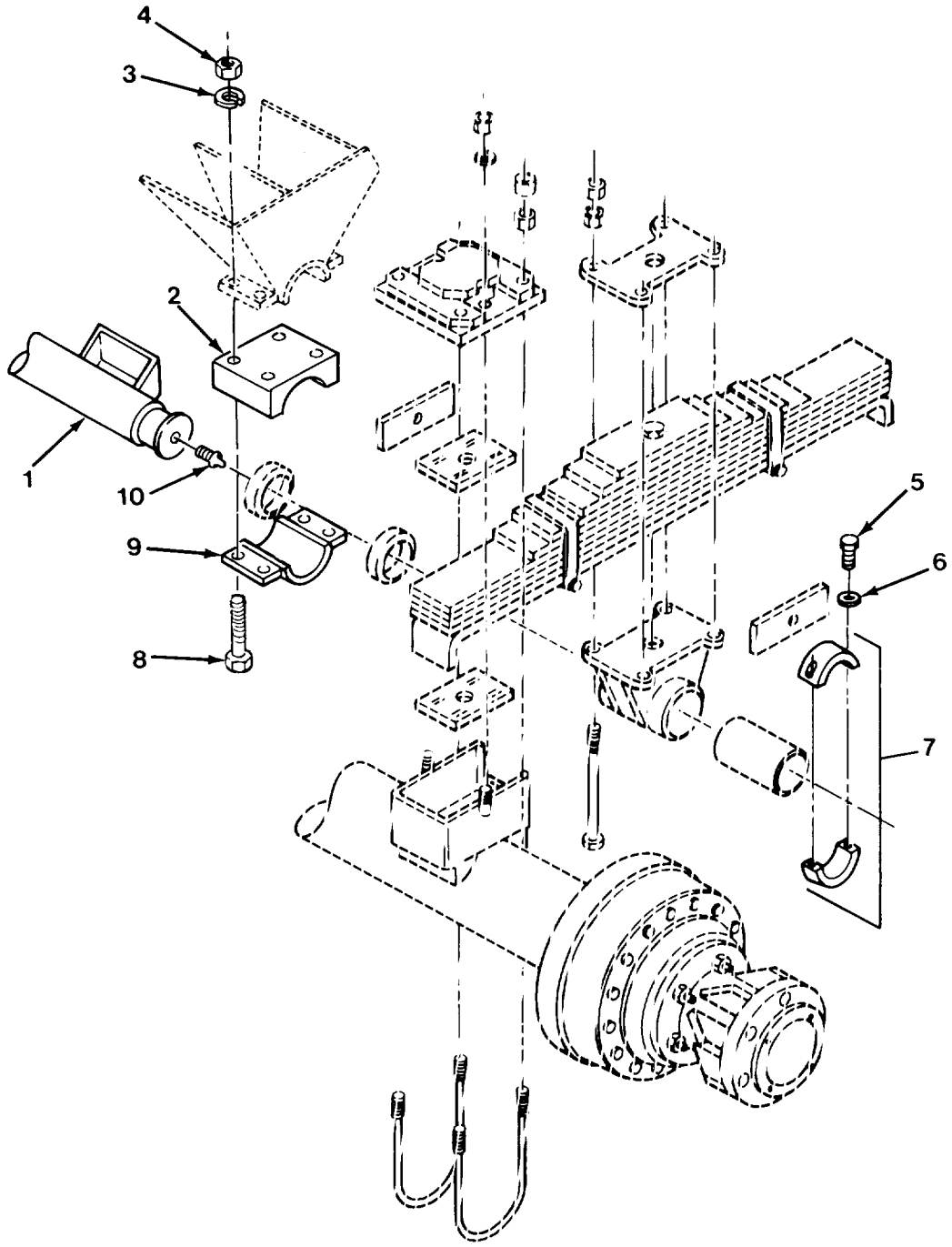

TA507729

FIGURE 5. TRUNNION AXLE.

	(1) ITEM NO	(2) SMR CODE	(3) CAGEC	(4) PART NUMBER	(5) DESCRIPTION AND USABLE ON CODES (UOC)	(6) QTY
					GROUP 1100 REAR AXLE ASSEMBLY	
					FIG. 5 TRUNNION AXLE	
	1	PBFZZ	19207	12269927	SHAFT, SHOULDERED..... UOC:7319732, 733	1
	1	PBFZZ	19207	12269927-1	TRUNNION UOC:734	1
	2	PAOZZ	19207	12357969	CLAMP, BLOCK, SECTION UOC:734	2
	3	PAFZZ	96906	MS35338-50	WASHER, LOCK UOC:731, 732, 733	8
	3	PAOZZ	96906	MS35338-51	WASHER, LOCK UOC:734	8
	4	PAFZZ	96906	MS51968-20	NUT, PLAIN, HEXAGON..... UOC:731, 732, 733	8
	4	PAOZZ	96906	MS51968-23	NUT, PLAIN, HEXAGON..... UOC:734	8
	5	PAFZZ	96906	MS16998-77	SCREW, CAP, SOCKET HE.....	4
	6	PAFZZ	96906	MS51848-12	WASHER, LOCK	4
*	7	PAFZZ	19207	12259773	BRACKET, DOUBLE ANGL	4
	8	PAFZZ	96906	MS90727-164	SCREW, CAP, HEXAGON H..... UOC:731, 732, 733	8
*	8	PAOZZ	96906	MS90727-197	SCREW, CAP, HEXAGON H UOC:734	8
*	9	PBFZZ	19207	12296263	CLAMP, LOOP UOC:731, 732, 733	2
*	9	PBOZZ	19207	12296263-1	CLAMP UOC:734	2
	10	PAOZZ	96906	MS15003-1	FITTING, LUBRICATION.....	2

END OF FIGURE

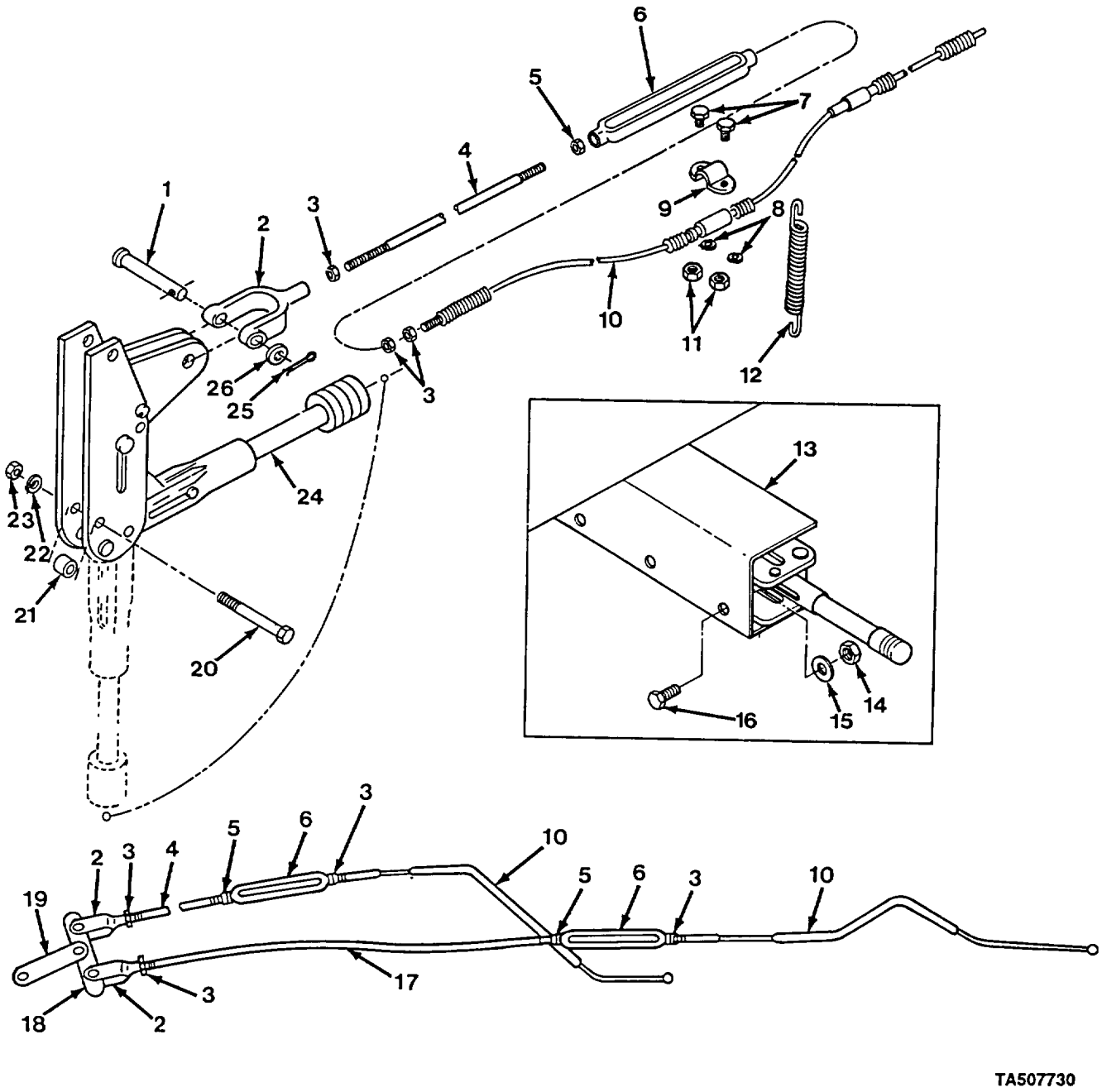

FIGURE 6. HANDBRAKE INSTALLATION.

(1) ITEM NO	(2) SMR CODE	(3) CAGEC	(4) PART NUMBER	(5) DESCRIPTION AND USABLE ON CODES (UOC)	(6) QTY
				GROUP 12 BRAKES	
				GROUP 1201 HANDBRAKES	
				FIG. 6 HANDBRAKE INSTALLATION	
1	PAOZZ	96906	MS35810-4	PIN, STRAIGHT, HEADED..... UOC:734	8
1	PAOZZ	96906	MS35810-4	PIN, STRAIGHT, HEADED UOC:731, 732, 733	2
2	PAOZZ	96906	MHS35812-4	CLEVIS, ROD END UOC:734	4
2	PAOZZ	96906	M535812-4	CLEVIS, ROD END UOC:731, 732, 733	2
3	PAOZZ	96906	MS35691-21	NUT, PLAIN, HEXAGON UOC:734	8
3	PAOZZ	96906	MS35691-21	NUT, PLAIN, HEXAGON UOC:731, 7329733	6
4	PFOZZ	19207	10950594-2	ROD, THREADED END UOC:731, 732	2
4	PAOZZ	19207	10950594-3	ROD, THREADED END UOC:733	2
4	PAOZZ	19207	10950594-1	ROD, THREADED END UOC:734	2
5	PAOZZ	96906	M527952-32	NUT, PLAIN, HEXAGON UOC:731, 7329733	2
5	PAOZZ	96906	MS27952-32	NUT, PLAIN, HEXAGON UOC:734	4
6	PAOZZ	19207	8331946	TURN, BUCKLE BODY UOC:731, 7329733	2
6	PAOZZ	19207	8331946	TURN, BUCKLE BODY UOC:734	4
* 7	PAOZZ	80204	B1821BHO31CO75N	BOLT, MACHINE..... UOC:734	8
* 7	PAOZZ	96906	MS90725-31	BOLT, MACHINE UOC:731, 732, 733	4
8	PAOZZ	96906	MS35338-45	WASHER, LOCK UOC:734	8
8	PAOZZ	96906	MS35338-45	WASHER, LOCK UOC:731, 732t733	4
9	PAOZZ	19207	5303461	BRACKET, BRAKE CABLE UOC:731, 732, 733	2
9	PAOZZ	19207	5303461	BRACKET, BRAKE CABLE UOC:734	2
10	PAOZZ	96906	MS53060-6	CABLE AND CONDUIT A..... UOC:731, 732, 733	2
10	PAOZZ	96906	MS53060-6	CABLE AND CONDUIT A..... UOC: 734	4
11	PAOZZ	96906	MS51967-5	NUT, PLAIN, HEXAGON..... UOC:731, 732, 733	4
11	PAOZZ	96906	MS51967-5	NUT, PLAIN, HEXAGON..... UOC:734	8

(1) ITEM NO	(2) SMR CODE	(3) CAGEC	(4) PART NUMBER	(5) DESCRIPTION AND USABLE ON CODES (UOC)	(6) QTY
12	PAOZZ	19207	11597761	SPRING, HELICAL, EXTE UOC:731, 732, 733	2
13	PFOZZ	19207	10950652-1	GUARD, SPLASH, VEHICU LH	1
13	PFOZZ	19207	10950652-2	GUARD, SPLASH, VEHICU RH	1
14	PAOZZ	96906	MS51967-2	NUT, PLAIN, HEXAGON	6
15	PAOZZ	99539	CBM21389	WASHER, LOCK	6
16	PAOZZ	96906	MS90725-6	SCREW, CAP, HEXAGON H	6
17	PFOZZ	19207	10950594-4	ROD, THREADED END UOC:734	2
18	PAOZZ	19207	12370093	CONNECTING LINK, RIG UOC:734	2
19	PAOZZ	19207	12370092	CONNECTING LINK, RIG UOC:734	2
20	PAOZZ	96906	MS590725-67	SCREW, CAP, HEXAGON H	6
21	PAOZZ	19207	8699500	SPACER, SLEEVE	6
22	PAOZZ	96906	MS35338-46	WASHER, LOCK	6
23	PAOZZ	96906	MS51967-8	NUT, PLAIN, HEXAGON	6
24	PAOZZ	19207	7392815	LEVER, MANUAL CONTRO	2
25	PAOZZ	96906	MS24665-283	PIN, COTTER UOC:731, 732, 733	2
25	PAOZZ	96906	MS24665-283	PIN, COTTER UOC:734	8
26	PAOZZ	96906	MS27183-58	WASHER, FLAT UOC:734	8

END OF FIGURE

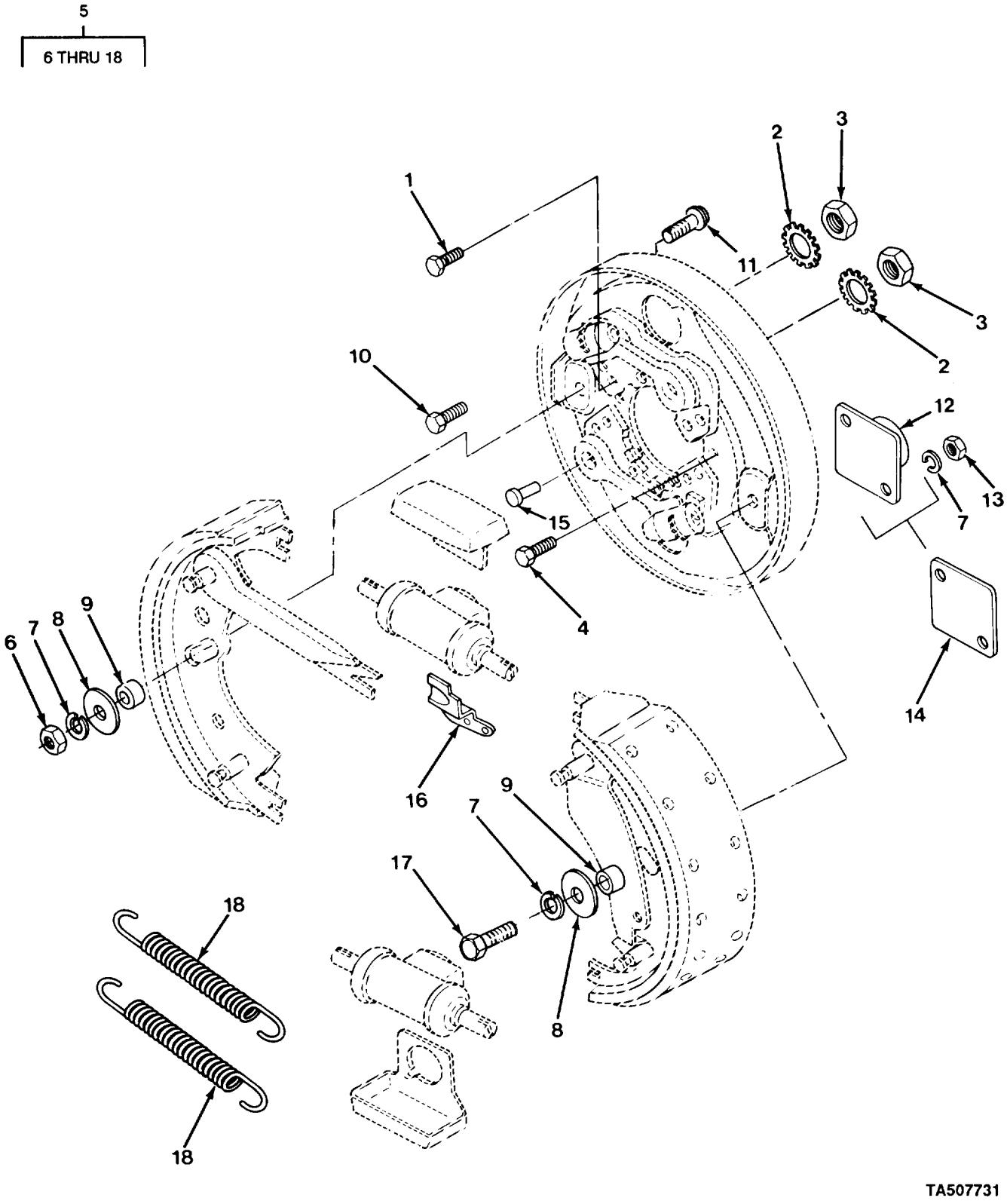

FIGURE 7. SERVICE BRAKE ASSEMBLY.

GROUP 1202 SERVICE BRAKES

FIG.7 SERVICE BRAKE ASSEMBLY

(1) ITEM NO	(2) SMR CODE	(3) CAGEC	(4) PART NUMBER	(5) DESCRIPTION AND USABLE ON CODES (UOC)	(6) QTY
1	PAOZZ	96906	MS90726-61	SCREW,CAP,HEXAGON	4
2	PAOZZ	96906	MS35335-35	WASHER,LOCK	12
3	PAOZZ	96906	MS51968-8	NUT,PLAIN,HEXAGON	12
4	PAOZZ	96906	MS90727-65	SCREW,CAP,HEXAGON	8
5	PFOOO	19207	8336701	BRAKE,SHOE TYPE LH	1
5	PFOOO	19207	8336702	BRAKE,SHOE TYPE RH	1
6	PAOZZ	96906	MS51970-1	.NUT,PLAIN,HEXAGON	1
7	PAOZZ	96906	MS35338-44	.WASHER,LOCK	4
8	PAOZZ	19207	5323088	.WASHER,FLAT	2
9	PAOZZ	19207	7412103	.SPACER,SLEEVE	2
10	PAOZZ	96906	MS90727-64	.SCREW,CAP,HEXAGON H	4
11	PAOZZ	19207	7411760	.BOLT,SQUARE NECK	1
12	PAOZZ	19207	8733890	.BRACKET,LEFT HAND	1
12	PAOZZ	19207	8733891	.BRACKET,RIGHT HAND	1
13	PAOZZ	96906	MS51967-2	.NUT,PLAIN,HEXAGON	2
14	PBOZZ	19207	8735729	.COVER,ACCESS	1
15	PAOZZ	19207	7412106	.PIN,STRAIGHT,HEADLE	2
16	PAOZZ	19207	8733892	.RAMP,CABLE LH	1
16	PAOZZ	21450	8733893	.RAMP,BRAKE CABLE RH	1
17	PAOZZ	96906	MS90727-8	.SCREW,CAP,HEXAGON H	1
18	PAOZZ	19207	8720515	.SPRING,HELICAL,EXTE	2

END OF FIGURE

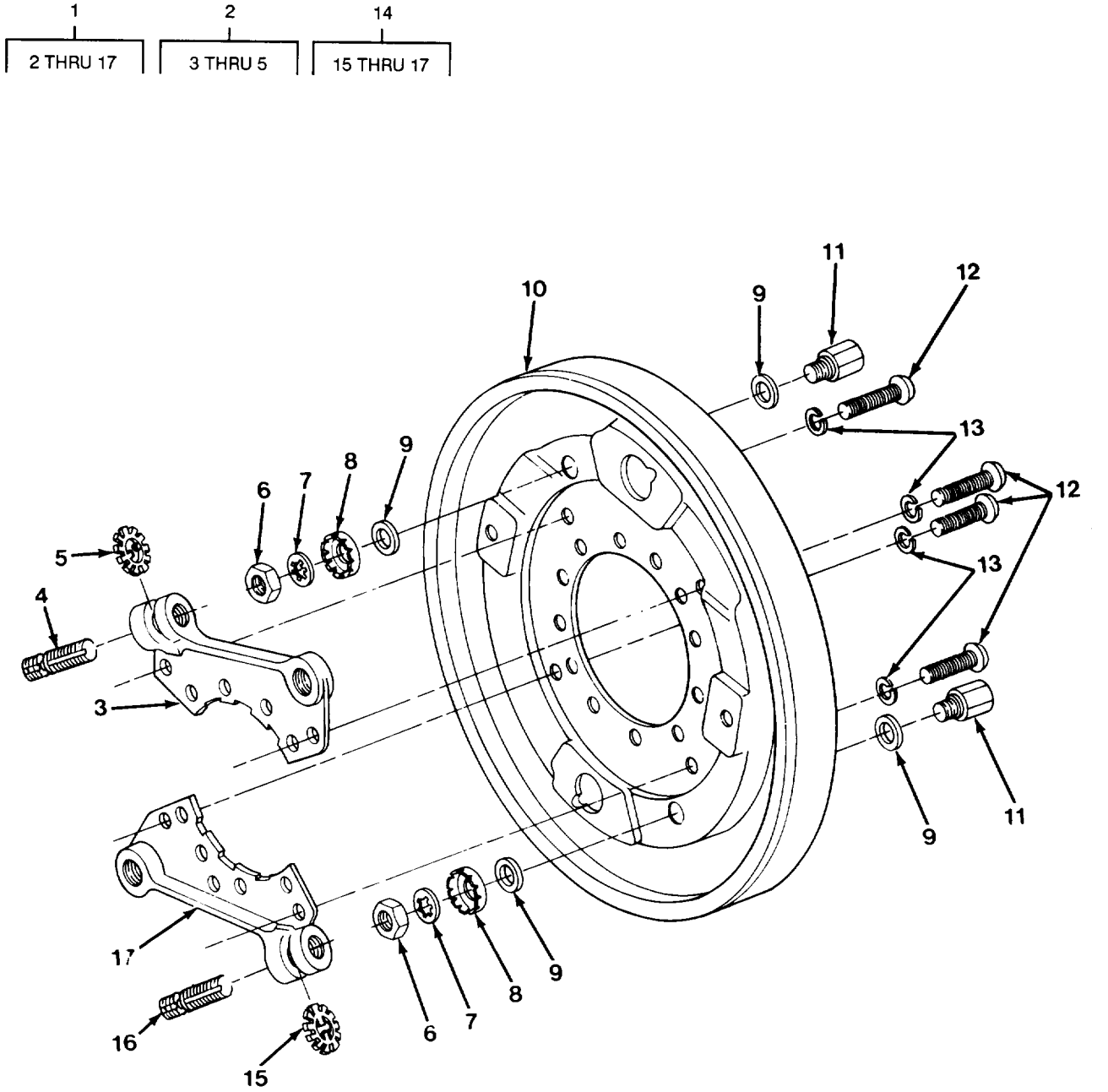

TA507732

FIGURE 8. BRAKE BACKING PLATE ASSEMBLY

	(1) ITEM NO	(2) SMR CODE	(3) CAGEC	(4) PART NUMBER	(5) DESCRIPTION AND USABLE ON CODES (UOC)	(6) QTY
					GROUP 1202 SERVICE BRAKES	
					FIG. 8 BRAKE BACKING PLATE ASSEMBLY	
	1	PFOZZ	78500	A1-3236M1261	.PLATE, BACKING, BRAKE, LH & RT SIDES	1
	1	PFOZZ	19207	8733902	.PLATE, BACKING, BRAKE R H	1
	2	PAOZZ	19207	8733897	..ADJUSTER, SLACK, BRAK RH	1
	3	PAOZZ	19207	8733909	...SUPPORT ASSEMBLY RH	1
	4	PAOZZ	19207	8336789	...SCREW, BRAKE SHOE AD RH	1
	5	PAOZZ	19207	8336704	...WHEEL, SLACK ADJUSTE	1
	6	PAOZZ	96906	MS35691-13	..NUT, PLAIN, HEXAGON	2
	7	PAOZZ	96906	MS35333-41	..WASHER, LOCK	2
	8	PAOZZ	19207	7412104	..PINION, BRAKE SHOE A	2
	9	PAOZZ	19207	7412120	..WASHER, FLAT	4
*	10	PAOZZ	19207	8733933	..PLATE, BACKING, BRAKE RH	1
*	10	XAOZZ	19207	8733932	..PLATE, BACKING, BRAKE LH	1
	11	PAOZZ	19207	8720331	..SPRING AND BOLT ASS	2
	12	PAOZZ	96906	MS90727-57	..SCREW, CAP, HEXAGON H	4
	13	PAOZZ	96906	MS35335-35	..WASHER, LOCK	4
	14	PAOZZ	19207	8733896	..ADJUSTER, SLACK, BRAK LH	2
	15	PAOZZ	19207	8336704	...WHEEL, SLACK ADJUSTE	1
	16	PAOZZ	19207	8336705	...SCREW, BRAKE SHOE AD LH	1
	17	PAOZZ	19207	8733908	...SUPPORT ASSY LH	1

END OF FIGURE

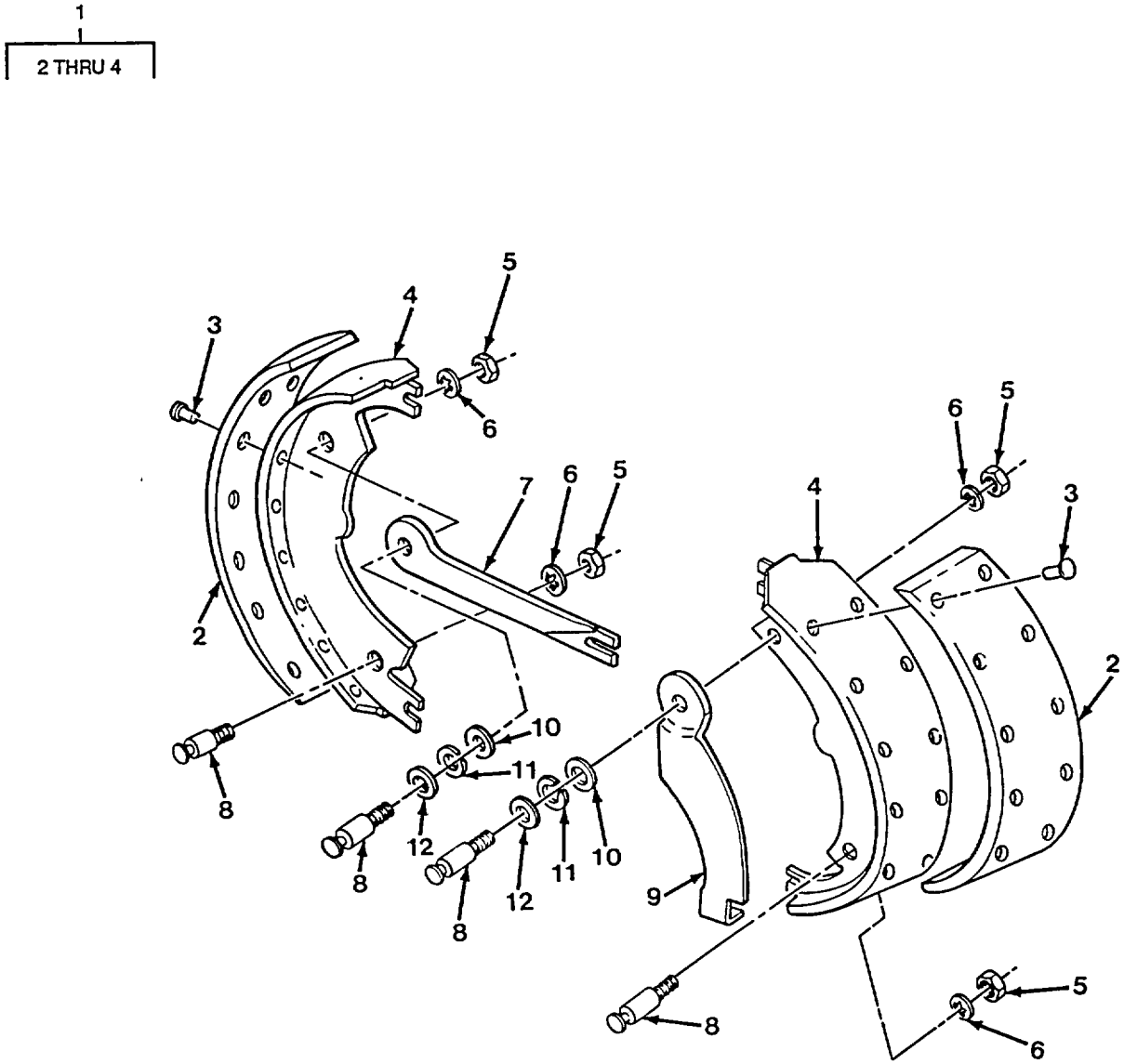

FIGURE 9. BRAKESHOE ASSEMBLY.

(1) ITEM NO	(2) SMR CODE	(3) CAGEC	(4) PART NUMBER	(5) DESCRIPTION AND USABLE ON CODES (UOC)	(6) QTY
				GROUP 1202 SERVICE BRAKES	
				FIG. 9 BRAKESHOE ASSEMBLY	
1	PAOZZ	78500	A8-3222W855	.BRAKE SHOE	2
2	XAFZZ	19207	8720517	..LINING, FRICTION	1
3	XAFZZ	96906	MS516536-175	..RIVET, TUBULAR	14
4	XAFZZ	19207	7064979	..WEB AND TABLE ASSY	1
5	PAOZZ	96906	MS51970-4	.NUT .PLAIN, HEXAGON	4
6	PAOZZ	96906	MS35335-36	.WASHER, LOCK	4
7	PAOZZ	19207	8733926	.CONNECTING LINK, RIG LH	1
* 7	PAOZZ	19207	8733927	.LEVER, MANUAL CONTRO RH	1
8	PAOZZ	19207	8733938	.PIN, SERVICE BRAKE	4
9	PAOZZ	02686	123917	.LEVER, LEFT HAND BRA LH	1
* 9	PAOZZ	19207	8733912	.LEVER, RIGHT HAND BR RH	1
* 10	PAOZZ	19207	8733936	.WASHER, FLAT	2
11	PAOZZ	19207	8733935	.WASHER, SPRING TENSI	2
12	PAOZZ	19207	8733937	.WASHER , SLOTTED	2

END OF FIGURE

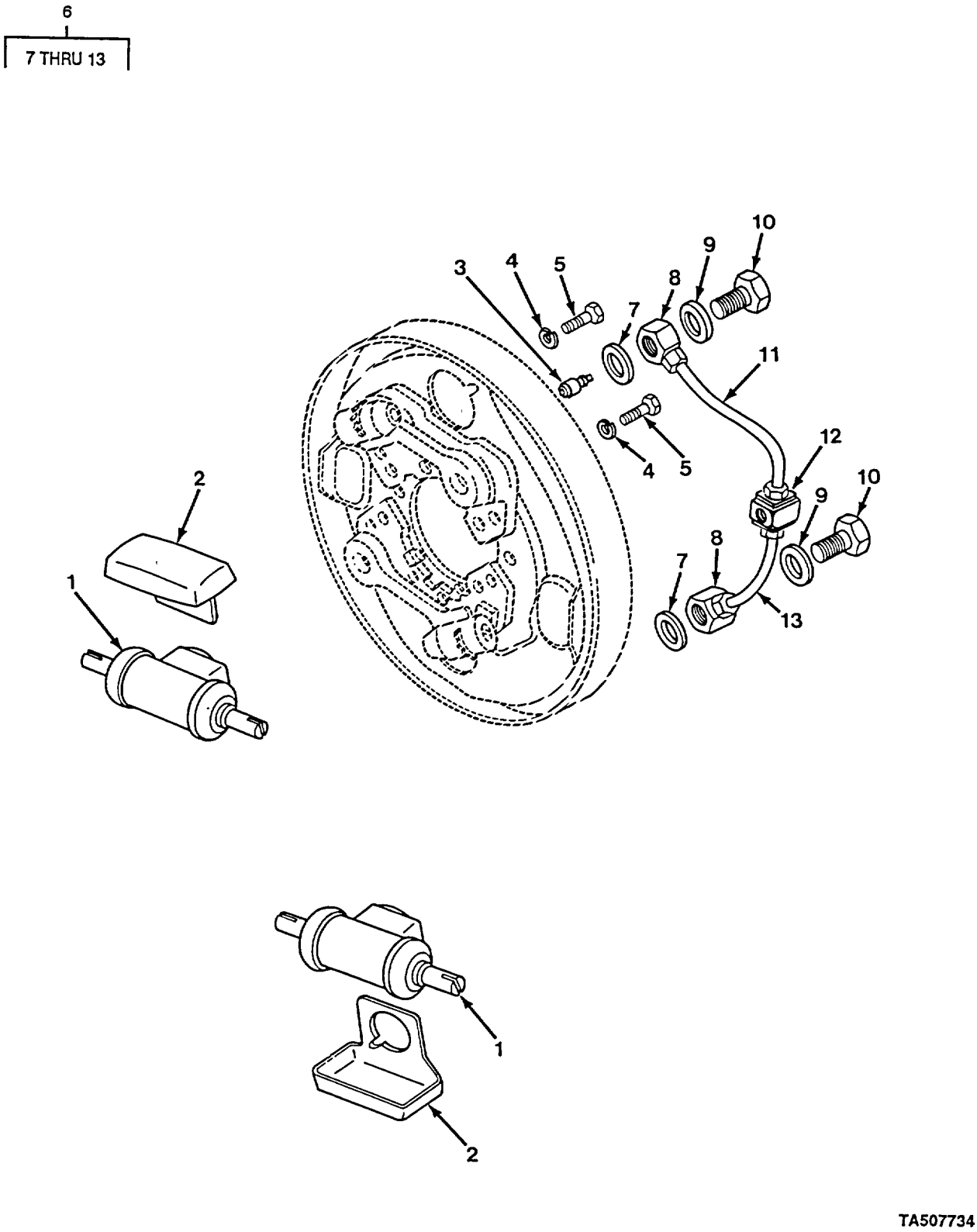

FIGURE 10. SERVICE BRAKE HYDRAULIC COMPONENTS.

(1) ITEM NO	(2) SMR CODE	(3) CAGEC	(4) PART NUMBER	(5) DESCRIPTION AND USABLE ON CODES (UOC)	(6) QTY
				GROUP 1204 HYDRAULIC BRAKE SYSTEM	
				FIG. 10 SERVICE BRAKE HYDRAULIC COMPONENTS	
1	PAOZZ	19207	7412065	CYLINDER ASSEMBLY,H	2
2	PAOZZ	19207	7412068	SHIELD,BRAKE DISK UPPER LEFT AND LOWER RIGHT	2
2	PAOZZ	19207	7412050	SHIELD,BRAKE DISK UPPER RIGHT AND LOWER LEFT	2
3	PAOZZ	19207	7373260	VALVE,BLEEDER,HYDRA	2
4	PAOZZ	96906	MS35338-45	WASHER,LOCK	4
5	PAOZZ	96906	MS90725-31	BOLT,MACHINE	4
6	PAOOO	19207	8733898	TUBE ASSEMBLY,METAL LH	1
6	PAOOO	19207	8733899	TUBE ASSEMBLY,METAL RH	1
7	PAOZZ	19207	7412088	.WASHER,SHOULDERED A	2
8	PAOZZ	19207	7745464	.TEE,TUBE	2
9	PAOZZ	19207	5298653	.SPACER,RING	2
10	PAOZZ	19207	7412079	.BOLT,FLUID PASSAGE	2
11	PAOZZ	19207	8733922	.TUBE ASSEMBLY,METAL LH	1
11	PAOZZ	19207	7411907	.TUBE ASSEMBLY,METAL RH	1
12	PAOZZ	19207	7411903	.CONNECTOR,MULTIPLE	1
13	PAOZZ	19207	8733920	.TUBE ASSEMBLY,METAL LH	1
13	PAOZZ	19207	8733918	.TUBE ASSEMBLY,METAL RH	1

END OF FIGURE

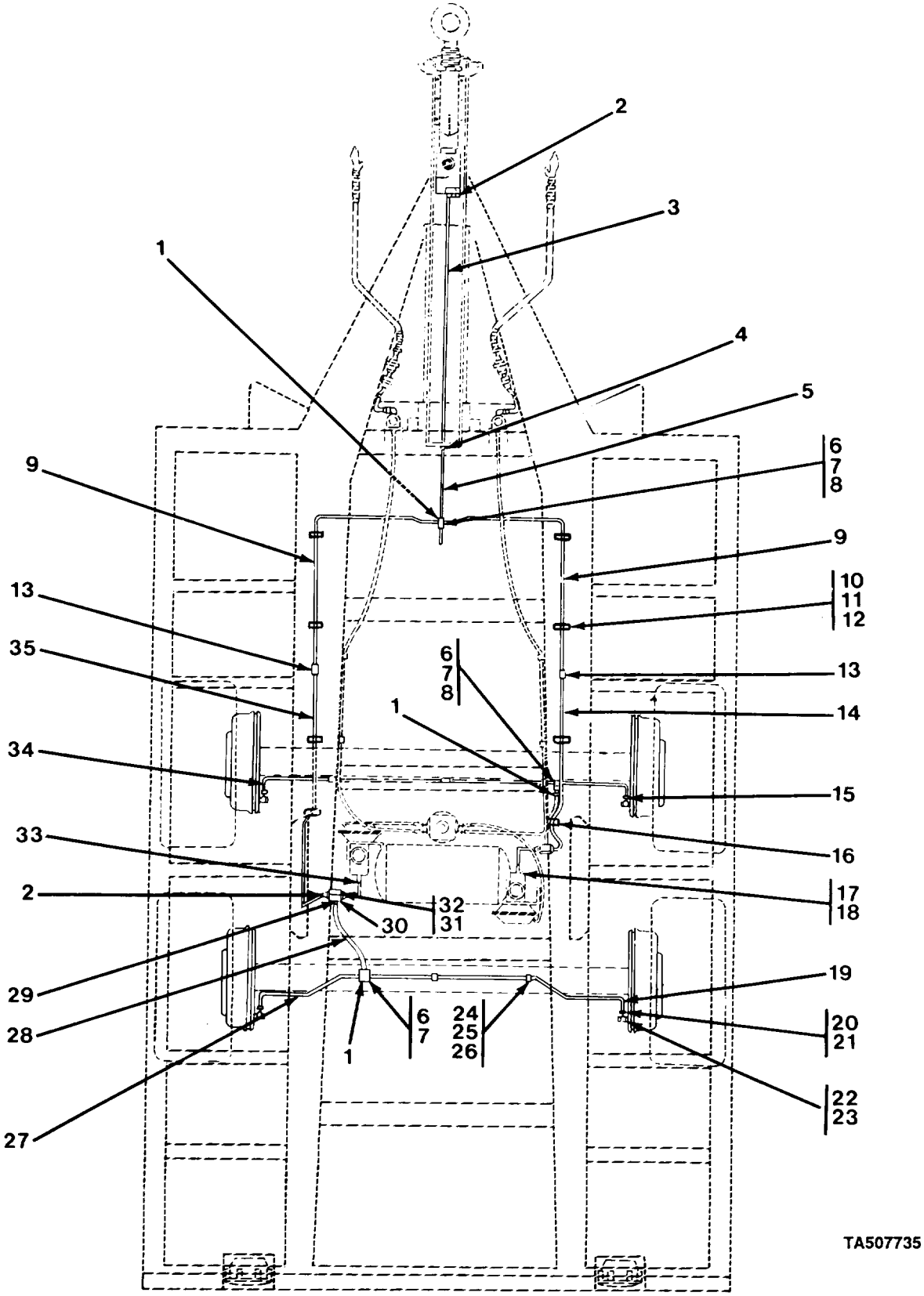

FIGURE 11. HYDRAULIC LINES, TUBES, AND FITTINGS (XM979 AND XM1061).

(1) ITEM NO	(2) SMR CODE	(3) CAGEC	(4) PART NUMBER	(5) DESCRIPTION AND USABLE ON CODES (UOC)	(6) QTY
				GROUP 1204 HYDRAULIC BRAKE SYSTEM	
				FIG. 11 HYDRAULIC LINES, TUBES, AND FITTINGS (XM979 AND XM1061)	
1	PAOZZ	19207	5167679	CONNECTOR, MULTIPLE UOC:731, 732	3
* 2	PAOZZ	19207	11669743	ADAPTER, STRAIGHT, TU UOC:731, 732	5
3	PAOZZ	19207	12314066	TUBE ASSEMBLY, METAL UOC:731, 732	1
4	PAOZZ	96906	MS35691-53	NUT, PLAIN, HEXAGON UOC:731, 732	1
5	PAOZZ	19207	8380781	HOSE ASSEMBLY, NONME UOC:731, 732	1
6	PAOZZ	96906	MS51967-11	NUT, PLAIN, HEXAGON..... UOC:731, 732	3
7	PAOZZ	96906	MS35338-47	WASHER, LOCK UOC:731, 732	3
* 8	PAOZZ	80204	B1821BH044C125N	SCREW, CAP, HEXAGON H UOC:731, 732	2
9	PAOZZ	19207	12314067	TUBE ASSEMBLY, METAL UOC:731, 732	2
10	PAOZZ	96906	MS35207-261	SCREW, MACHINE UOC:731, 732	8
11	PAOZZ	96906	MS35338-43	WASHER, LOCK UOC:731, 732	8
12	PAOZZ	96906	MS21333-3	CLAMP, LOOP UOC:731, 732	8
13	PAOZZ	19200	143450	COUPLING, TUBE..... UOC:731, 732	2
14	PAOZZ	19207	12314069	TUBE ASSEMBLY, METAL..... UOC:731, 732	1
15	PAOZZ	19207	12270005	TUBE ASSEMBLY, METAL..... UOC:731, 732	1
16	PAOZZ	23705	A298819	HOSE ASSEMBLY, NONME..... UOC:731, 732	1
17	PAOZZ	79470	112-06007	REDUCER, TUBE..... UOC:731, 732	2
18	PAOZZ	19207	5156636	GASKET..... UOC:731, 732	2
19	PAOZZ	19207	12313050	TUBE ASSEMBLY, METAL..... UOC:731, 732	1
20	PAOZZ	63477	FC-11409	BOLT, FLUID PASSAGE..... UOC:731, 732	4
21	PAOZZ	63477	FC-13030	WASHER, SHOULDERED A..... UOC:731, 732	4
22	PAOZZ	19207	7745464	TEE, TUBE..... UOC:731, 732	4
23	PAOZZ	19207	5298653	SPACER, RING..... UOC:731, 732	4
24	PAOZZ	96906	MS35206-277	SCREW, MACHINE	4

(1) ITEM NO	(2) SMR CODE	(3) CAGEC	(4) PART NUMBER	(5) DESCRIPTION AND USABLE ON CODES (UOC)	(6) QTY
				UOC:731, 9732	
25	PAOZZ	96906	MS35338-44	WASHER, LOCK	4
				UOC:731, 732	
26	PAOZZ	96906	MS21333-34	CLAMP, LOOP	4
				UOC:731, 732	
27	PAOZZ	19207	12313049	TUBE ASSEMBLY, METAL.....	1
				UOC:731, 732	
28	PAOZZ	19207	8363981-1	HOSE ASSEMBLY, NONME.....	1
				UOC:731, 732	
29	PFOZZ	19207	11669744	ELBOW, PIPE TO TUBE.....	2
				UOC:731, 732	
30	PFOZZ	91816	462B-2PPP	VALVE	2
				UOC:731, 732	
31	PAOZZ	96906	MS35207-270	SCREW, MACHINE.	4
				UOC:731, 732	
32	PAOZZ	96906	MS35338-43	WASHER, LOCK	4
				UOC:731, 732	
33	PFOZZ	19207	12314070	TUBE ASSEMBLY, METAL.....	2
				UOC:731, 732	
34	PAOZZ	19207	12270014	TUBE ASSEMBLY, METAL.....	2
				UOC:731, 732, 734	
35	PAOZZ	19207	12314068	TUBE ASSEMBLY, METAL.....	1
				UOC:731, 732	

END OF FIGURE

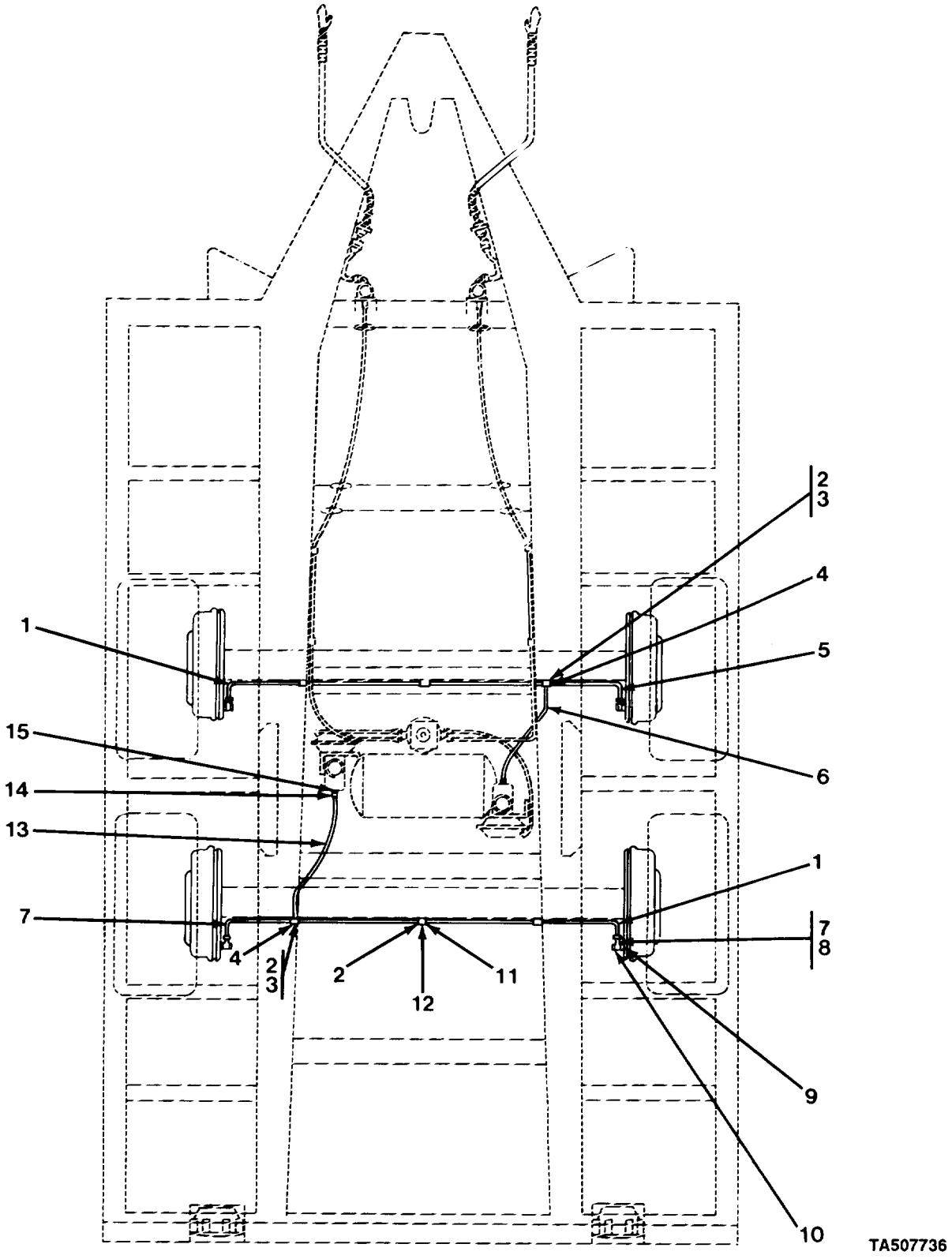

FIGURE 12. HYDRAULIC LINES, TUBES, AND FITTINGS (M1061A1).

	(1) ITEM NO	(2) SMR CODE	(3) CAGEC	(4) PART NUMBER	(5) DESCRIPTION AND USABLE ON CODES (UOC)	(6) QTY
					GROUP 1204 HYDRAULIC BRAKE SYSTEM	
					FIG. 12 HYDRAULIC LINES TUBES, AND FITTINGS (M1061A1)	
	1	PAOZZ	19207	12270014	TUBE ASSEMBLY, METAL UOC:73297339734	2
	2	PAOZZ	96906	MS51967-11	NUT, PLAIN, HEXAGON UOC:733	3
	3	PAOZZ	96906	MS535338-47	WASHER, LOCK UOC:733	2
*	4	PAOZZ	19207	5167679	CONNECTOR, MULTIPLE UOC:732, 733	3
*	5	PAOZZ	19207	12270005	TUBE ASSEMBLY, METAL UOC:732, 733	1
	6	PAOZZ	19207	8363981-2	HOSE ASSEMBLY, NONME UOC:733	1
	7	PAOZZ	19207	7412079	.BOLT, FLUID PASSAGE UOC:732, 7339734	2
	8	PAOZZ	19207	7412088	.WASHER, SHOULDERED A UOC:732, 733, 734	4
	9	PAOZZ	19207	7745464	.TEE, TUBE UOC:732, 7339734	4
	10	PADZZ	19207	5298653	.SPACER, RING UOC:732, 733, 734	2
	11	PAOZZ	96906	MS21333-34	CLAMP, LOOP UOC:732, 733	4
	12	PAOZZ	96906	MS35338-44	WASHER, LOCK UOC:733, 734	12
	13	PAOZZ	19207	8363981-3	HOSE ASSEMBLY, NONME UOC:733	1
*	14	PAOZZ	19207	8365390	REDUCER, TUBE UOC:733, 734	2
*	15	PAOZZ	19207	5156636	GASKET ..... UOC: 732, 733	2

END OF FIGURE

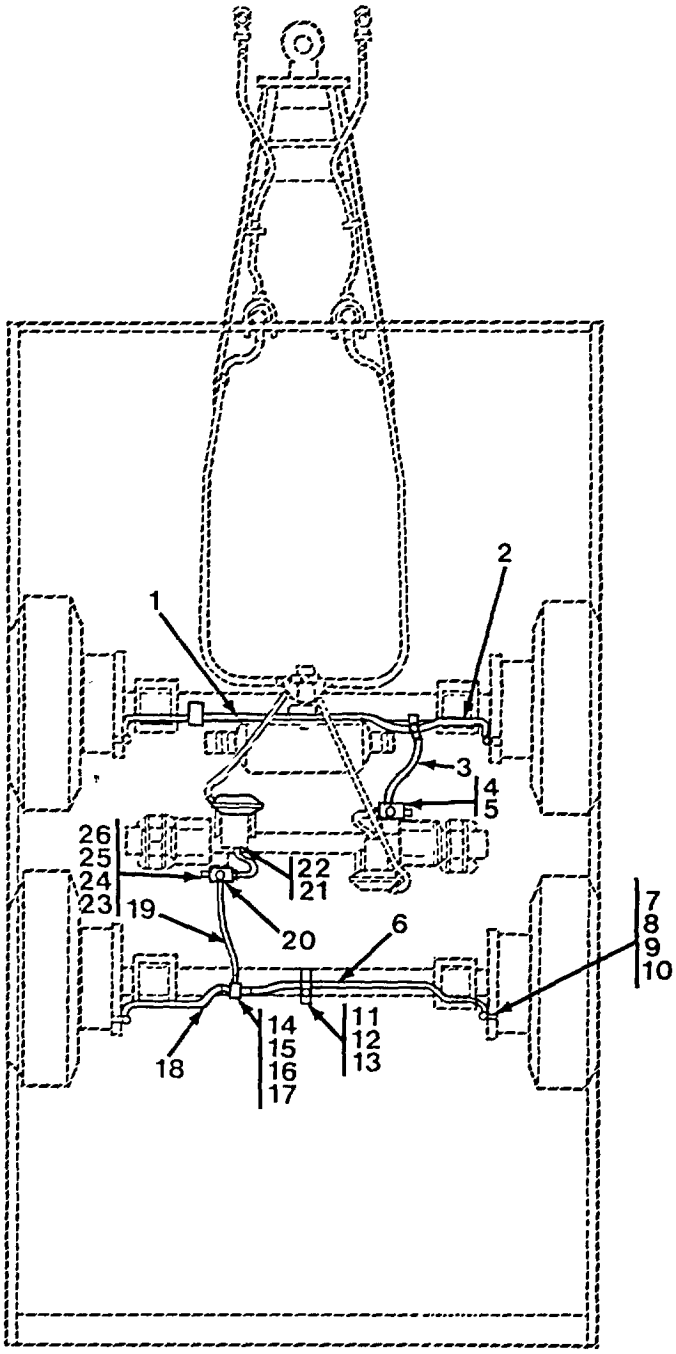

TA507737

FIGURE 13. HYDRAULIC LINES, TUBES, AND FITTINGS (XM1073).

(1) ITEM NO	(2) SMR CODE	(3) CAGEC	(4) PART NUMBER	(5) DESCRIPTION AND USABLE ON CODES (UOC)	(6) QTY
				GROUP 1204 HYDRAULIC BRAKE SYSTEM	
				FIG. 13 HYDRAULIC LINES, TUBES, AND FITTINGS (XM1073)	
1	PAOZZ	19207	12270014	TUBE ASSEMBLY, METAL UOC:732, 734	2
* 2	PAOZZ	19207	12270005	TUBE ASSEMBLY, METAL UOC:732, 734	1
3	PAOZZ	19207	7411023	HOSE ASSEMBLY, NONME UOC:734	1
* 4	PFOZZ	91816	462B-2PPP	VALVE UOC:732, 734	2
* 5	PFOZZ	19207	11669744	ELBOW, PIPE TO TUBE ..... UOC:=732, 734	2
* 6	PAOZZ	19207	12313050	TUBE ASSEMBLY, METAL UOC:732, 734	1
* 7	PAOZZ	19207	7412079	.BOLT, FLUID PASSAGE UOC:732, 733, 734	4
* 8	PAOZZ	19207	7412088	.WASHER, SHOULDERED A UOC:732, 733, 734	4
* 9	PAOZZ	19207	7745464	.TEE, TUBE UOC:732, 733, 734	4
* 10	PAOZZ	19207	5298653	.SPACER, RING UOC:732, 733, 734	4
* 11	PAOZZ	96906	MS21333-34	CLAMP, LOOP UOC:732, 734	4
12	PAOZZ	96906	MS35338-44	WASHER, LOCK UOC:733, 734	12
* 13	PAOZZ	96906	MS51967-2	NUT, PLAIN, HEXAGON UOC:732, 733, 734	1
* 14	PAOZZ	19207	5167679	CONNECTOR, MULTIPLE UOC:732, 734	3
* 15	PAOZZ	80204	B1821BH044C125N	SCREW, CAP, HEXAGON H UOC:732, 734	2
* 16	PAOZZ	96906	MS35338-47	WASHER, LOCK UOC:732, 734	4
17	PAOZZ	96906	MS51967-11	NUT, PLAIN, HEXAGON UOC:732, 734	2
* 18	PAOZZ	19207	12313049	TUBE ASSEMBLY, METAL UOC:732, 734	1
* 19	PAOZZ	19207	8363981-1	HOSE ASSEMBLY, NONME UOC:732, 734	1
20	PAOZZ	19207	12370320	TUBE ASSEMBLY, METAL UOC:734	2
21	PAOZZ	19207	8365390	REDUCER, TUBE UOC:734	2
22	PAOZZ	19207	5156636	GASKET UOC:732, 734	2
23	PFOZZ	81343	4 130109CB	PLUG UOC:734	2
* 24	PAOZZ	19207	11669743	ADAPTE R, STRAIGHT, TU	5

(1) ITEM NO	(2) SMR CODE	(3) CAGEC	(4) PART NUMBER	(5) DESCRIPTION AND USABLE ON CODES (UOC)	(6) QTY
				UOC:732, 734	
* 25	PAOZZ	96906	MS35207-270	SCREW, MACHINE	4
				UOC:732, 734	
* 26	PAOZZ	96906	MS35338-43	WASHER, LOCK	8
				UOC:732, 734	

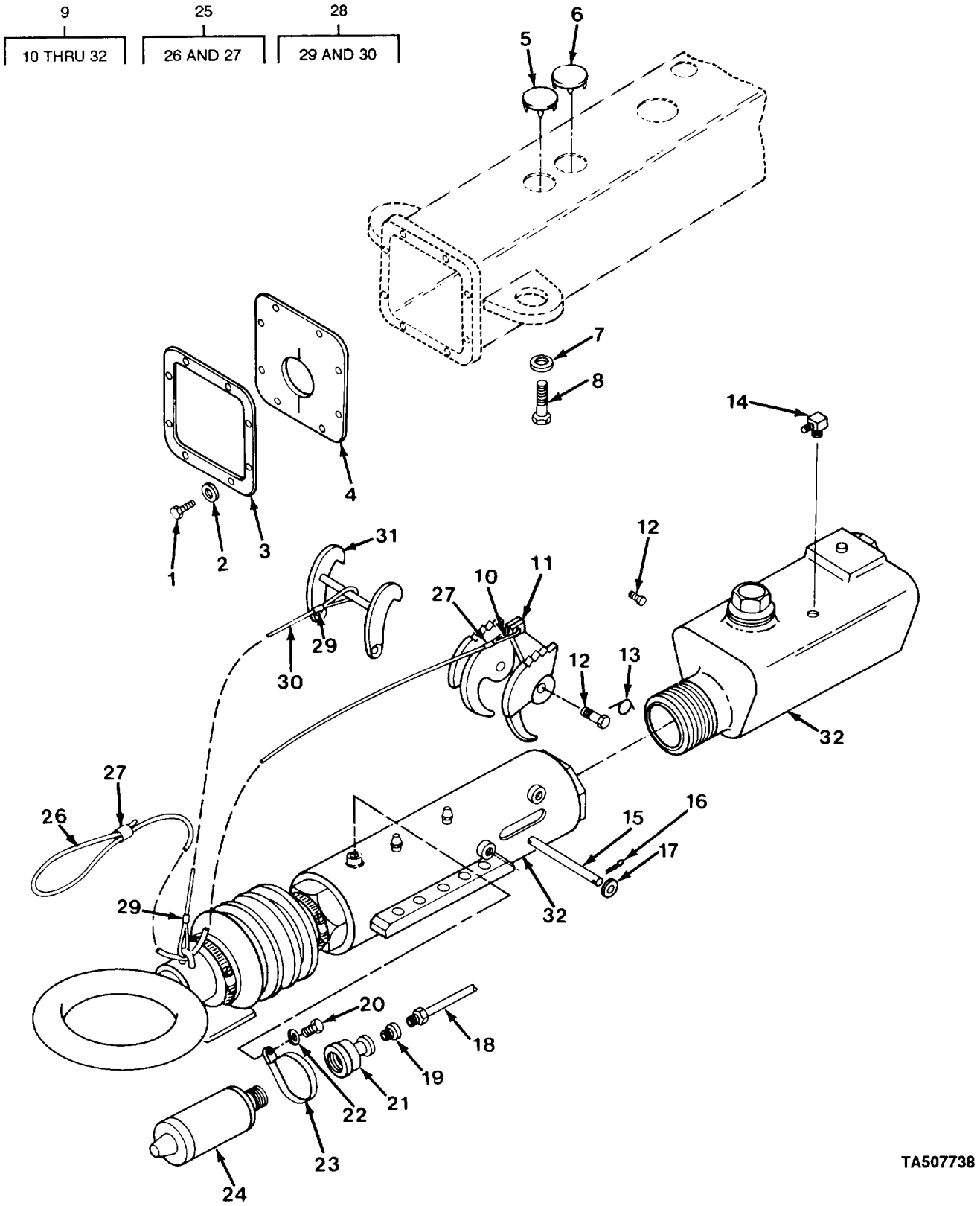

FIGURE 14. BRAKE ACTUATOR ASSEMBLY (XM979 AND XM1061).

	(1) ITEM NO	(2) SMR CODE	(3) CAGEC	(4) PART NUMBER	(5) DESCRIPTION AND USABLE ON CODES (UOC)	(6) QTY
					GROUP 1204 HYDRAULIC BRAKE SYSTEM	
					FIG. 14 BRAKE ACTUATOR ASSEMBLY (XM979 AND XM1061)	
	1	PAOZZ	96906	M535207-265	SCREW, MACHINE UOC:731, 732	8
	2	PAOZZ	96906	MS35338-43	WASHER, LOCK UOC:731, 732	8
*	3	PAOZZ	19207	12314058	SPACER, RING UOC:731, 732	1
*	4	PFOZZ	19207	12314057	SEAL UOC:731, 732	1
*	5	PFOZZ	57771	D4286	BUTTON, PLUG UOC:731, 732	3
*	6	PFOZZ	57771	03103	BUTTON, PLUG UOC:731, 732	1
	7	PAOZZ	19200	10910174-7	WASHER, FLAT UOC:731, 732	10
	8	PAOZZ	96906	MS90727-160	SCREW, CAP, HEXAGON H..... UOC:7319732	10
*	9	PFOOO	19207	12314065	BRAKE BOOSTER ASSEM..... UOC:731, 732	1
	10	PAOZZ	88044	AN100CB	.THIMBLE, ROPE UOC:731, 732	1
	11	PAOZZ	19207	12331693	.LEVER, MANUAL CONTRO..... UOC:731, 732	1
	12	PAOZZ	96906	MS90727-31L	.BOLT, SELF-LOCKING..... UOC:731, 732	2
	13	PAOZZ	19207	12331699	.SPRING, HELICAL, TORS UOC:731, 732	2
	14	PAOZZ	96906	MS51879-3	.ELBOW, PIPE TO TUBE UOC:731, 732	1
	15	PAOZZ	19207	12331702	.PIN, STRAIGHT, HEADLE UOC:731, 732	1
	16	PAOZZ	96906	MS16562-38	.PIN, SPRING UOC:731, 732	2
	17	PAOZZ	96906	MS27183-16	.WASHER, FLAT UOC:731, 732	2
	18	PAOZZ	19207	12331701	.TUBE ASSEMBLY, METAL UOC:731, 732	1
*	19	PAOZZ	81343	3-2 0401028A	.ADAPTER, STRAIGHT, PI..... UOC:731, 732	1
	20	PAOZZ	96906	MS35207-265	.SCREW, MACHINE UOC:731, 732	1
	21	PAOZZ	96906	MS39232-6	.REDUCER, PIPE..... UOC:731, 732	1
	22	PAOZZ	96906	MS35338-43	.WASHER, LOCK UOC:731, 732	1
	23	PAOZZ	96906	MS21919WCG-28	.CLAMP, LOOP UOC:731, 732	1
*	24	PAOZZ	62144	18A-849210-000	.ACCUMULATOR, HYDRAUL	1

(1) ITEM NO	(2) SMR CODE	(3) CAGEC	(4) PART NUMBER	(5) DESCRIPTION AND USABLE ON CODES (UOC)	(6) QTY
				UOC:731, 732	
25	AOOOO	19207	12314081	.WIRE ROPE ASSY	1
				UOC:731, 732	
26	MOOZZ	19207	12314081-1	..WIRE ROPE MAKE FROM ROPE P/N.....	1
				7068272 (19207)	
				UOC:731, 732	
27	PAOZZ	96906	MS51844-26	..SWAGING SLEEVE, WIRE	2
				UOC:731, 732	
28	AOOOO	19207	12331704	.WIRE ROPE ASSY	1
				UOC:731, 732	
29	PAOZZ	96906	MS51844-24	..SWAGING SLEEVE, WIRE	1
				UOC:731, 732	
30	MOOZZ	19207	12331704-1	..WIRE ROPE MAKE FROM P/N 7068272.....	1
				(19207)	
				UOC:731, 732	
31	PAOZZ	19207	12331696	.PAWL.....	1
				UOC:731, 732	
32	PAOZZ	19207	11669750	CYLINDER ASSEMBLY, H FOR COMPONENT-.....	1
				PARTS SEE FIG. 15	
				UOC:731, 732	

END OF FIGURE

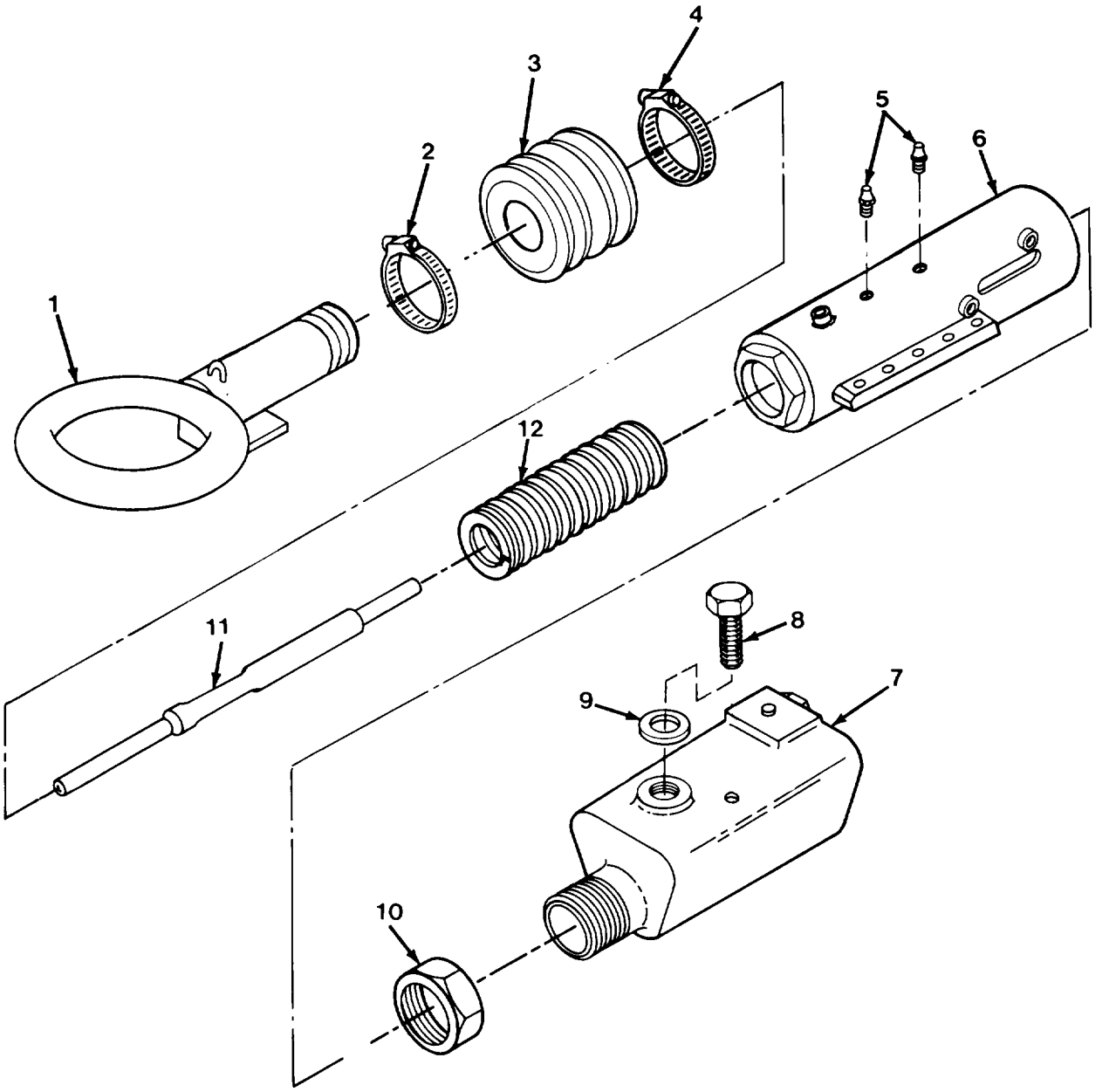

FIGURE 15. BRAKE ACTUATOR ASSEMBLY (XM979 AND XM1061).

	(1) ITEM NO	(2) SMR CODE	(3) CAGEC	(4) PART NUMBER	(5) DESCRIPTION AND USABLE ON CODES (UOC)	(6) QTY
					GROUP 1204 HYDRAULIC BRAKE SYSTEM	
					FIG. 15 BRAKE ACTUATOR ASSEMBLY (XM979 AND XM1061)	
	1	PFFZZ	93072	622812	..TOWBAR ASSEMBLY, ACT UOC:731, 732	1
	2	PAOZZ	93072	580546	..RING, BRAKE UOC:731, 732	1
	3	PAOZA	93072	621001	..BELLOWS, PROTECTION..... UOC:731, 732	1
	4	PAOZZ	93072	622020	..CLAMP, LOOP UOC:731, 732	1
	5	PAOZZ	93072	52133-9	..FITTING, LUBRICATION..... UOC:731, 732	1
*	6	PFFZZ	93072	622813	..SLEEVE, MOUNTING ASS UOC:731, 732	1
*	7	PAOZZ	16128	580376	..CYLINDER ASSEMBLY, H LESS FILLER ..... CAP & GASKET UOC:731, 732	1
	8	PAOZZ	19207	12314063	...PLUG, FILLER..... UOC:731, 732	1
	9	PAOZZ	93072	580342	...GASKET UOC:731, 732	1
	10	PAOZZ	93072	57504	...NUT, PLAIN, HEXAGON UOC:731, 732	1
	11	PAFZZ	19207	12354237	..ROD, PUSH UOC:731, 732	1
*	12	PAFZZ	19207	12354238	..SPRING, HELICAL, COMP..... UOC:731, 732	1

END OF FIGURE

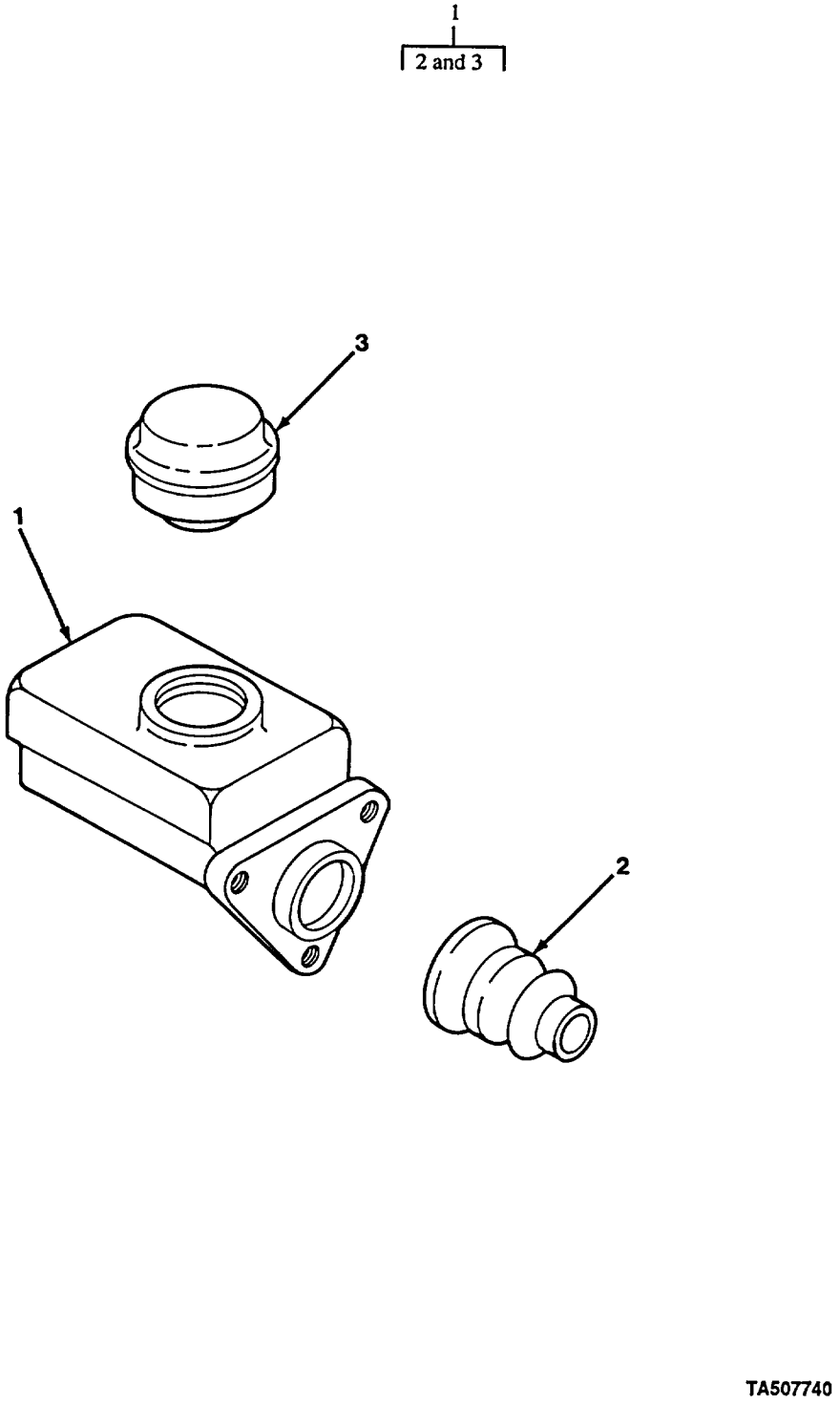

FIGURE 16. MASTER CYLINDER ASSEMBLY.

(1) ITEM NO	(2) SMR CODE	(3) CAGEC	(4) PART NUMBER	(5) DESCRIPTION AND USABLE ON CODES (UOC)	(6) QTY
				GROUP 1204 HYDRAULIC BRAKE SYSTEM	
				FIG. 16 MASTER CYLINDER ASSEMBLY	
1	PAOZO	634717	FE14240	CYLINDER ASSEMBLY, H	2
2	PAOZZ	19207	7979699	.BOOT, DUST AND MOIST	1
3	PBOZZ	19207	12331725-1	.CAP, FILLER OPENING	1

END OF FIGURE

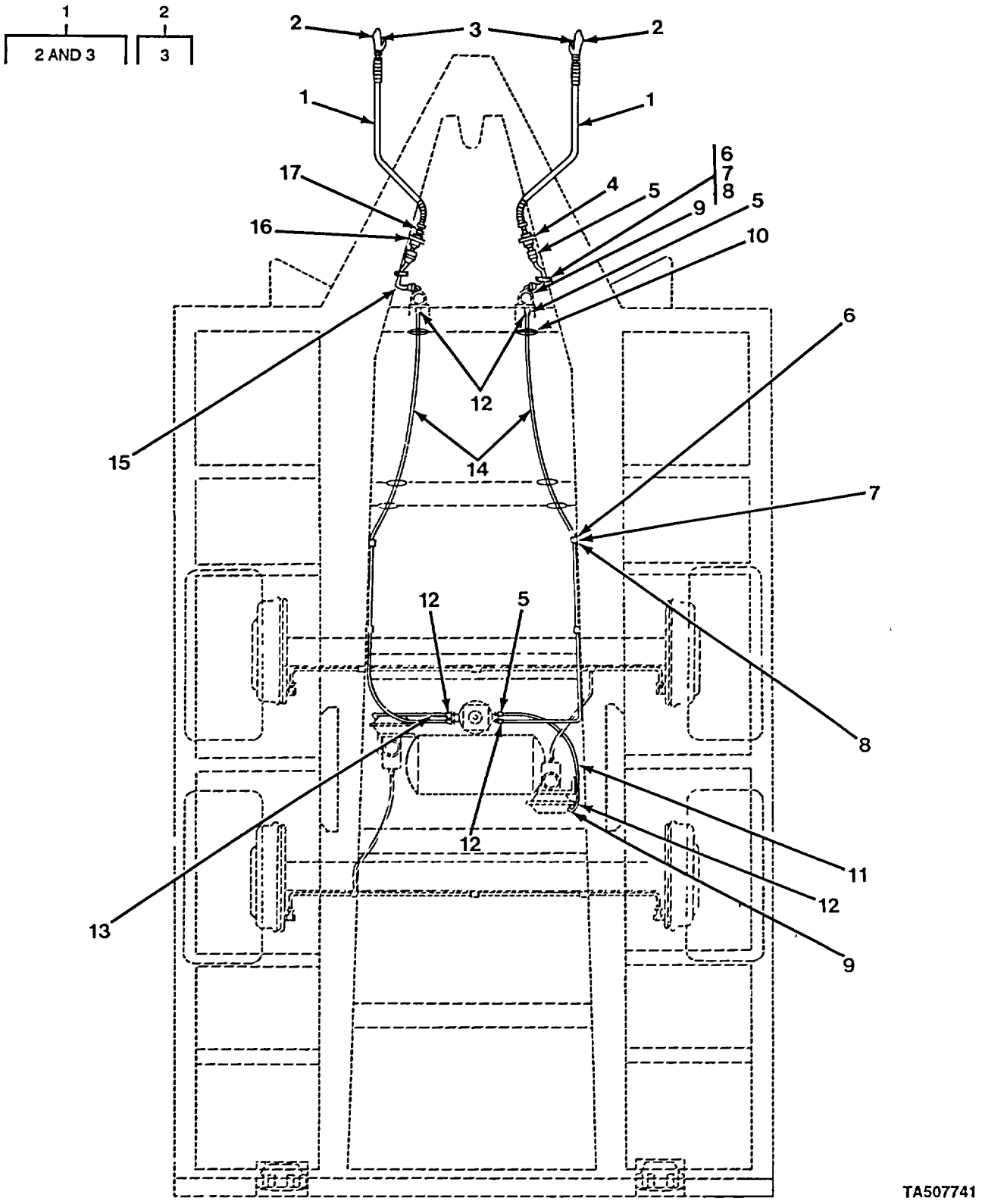

FIGURE 17. AIR LINES, HOSES, AND FITTINGS (XM979, XM1061, AND M1061A1).

(1) ITEM NO	(2) SMR CODE	(3) CAGEC	(4) PART NUMBER	(5) DESCRIPTION AND USABLE ON CODES (UOC)	(6) QTY
				GROUP 1208 AIRBRAKE SYSTEM	
				FIG. 17 AIR LINES, HOSES, AND FITTINGS (XM979, XM1061, AND M1061A1)	
1	PAOZZ	06721	N13448	HOSE ASSEMBLY,NONME UOC:731, 732, 733	2
2	PAOZZ	79146	MS35746-1	.COUPLING HALF, QUICK UOC:731, 732, 733	1
3	PAOZZ	96906	MS35748-1	..PACKING, PREFORMED UOC:731, 732, 733	1
4	PAOZZ	96906	MS53007-1	PLATE, IDENTIFICATIO SERVICE UOC:731, 732, 733	1
5	PAOZZ	81343	6-4 1201028A	ADAPTE R, STRAIGHT, PI UOC:731, 732, 733	8
6	PAOZZ	96906	MS35207-277	SCREW, MACHINE UOC:731, 732, 733	6
* 7	PAOZZ	99539	CBM21389	WASHER, LOCK UOC:731, 732, 733	6
* 8	PAOZZ	81348	CMDX2-3PT573036	CLAMP, LOOP UOC:731, 732, 733	6
* 9	PAOZZ	81343	6-4 1002028A	ELBOW, PIPE TO TUBE UOC:731, 732, 733	4
10	PAOZZ	96906	MS35489-81	GROMMET, NONMETALLIC..... UOC:731, 732, 733	6
11	MOOZZ	19207	CPR104420X36	TUBE MAKE FROM HOSE P/N 246115..... (19207) UOC:731, 732, 733	1
12	PAOZZ	19207	CPR102321-1	INSERT, TUBE FITTING UOC:731, 732, 733	8
13	MOOZZ	19207	CPR104420X24	TUBE MAKE FROM HOSE P/N 246115..... (19207) UOC:731, 732, 733	1
14	MOOZZ	19207	CPR104420X102	TUBE MAKE FROM HOSE P/N 246115..... (19207)) UOC:731, 732, 733	2
15	XBOZZ	19207	10950611	TUBE, BENT, METALLIC UOC:731, 732, 733	2
16	PAOZZ	96906	MS53007-2	PLATE, IDENTIFICATIO EMERGENCY UOC:731, 732, 733	1
17	PAOZZ	19207	8328782	COUPLING, PIPE UOC:731, 732, 733	2

END OF FIGURE

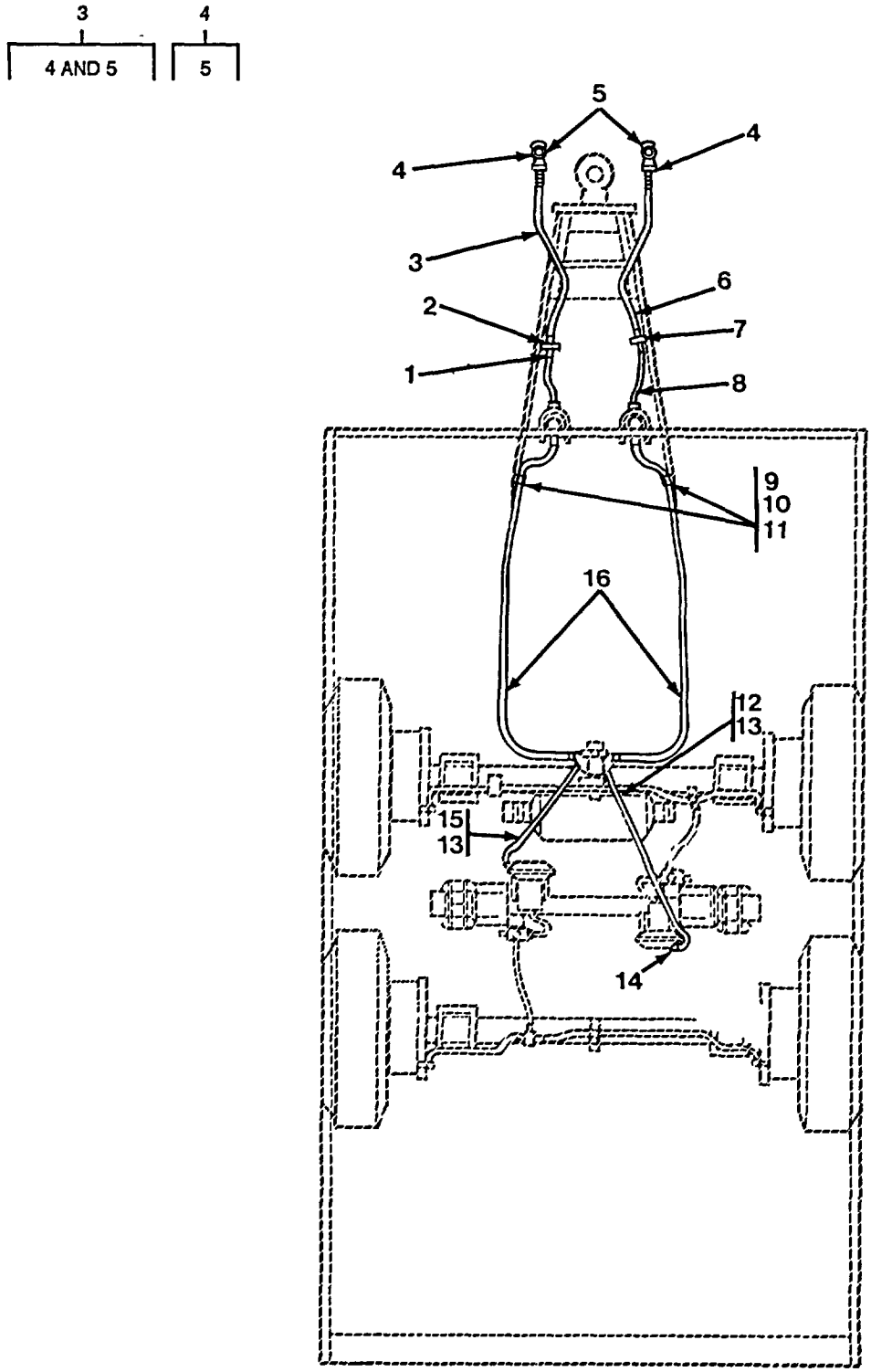

TA507742

FIGURE 18. AIR LINES, HOSES, AND FITTINGS (XM1073).

(1) ITEM NO	(2) SMR CODE	(3) CAGEC	(4) PART NUMBER	(5) DESCRIPTION AND USABLE ON CODES (UOC)	(6) QTY
				GROUP 1208 AIRBRAKE SYSTEM	
				FIG. 18 AIR LINES, HOSES, AND FITTINGS (XM1073)	
1	PAOZZ	81343	6-4 120102BA	ADAPTER, STRAIGHT, PI UOC:732, 733, 734	8
2	PAOZZ	96906	MS53007-2	PLATE, IDENTIFICATIO UOC:732, 733, 734	1
* 3	PAOZZ	06721	N13448	HOSE ASSEMBLY, NONME UOC:732, 733, 734	2
4	PAOZZ	79146	MS35746-1	.COUPLING HALF, QUICK UOC:732, 733, 734	1
5	PAOZZ	96906	MS35748-1	..PACKING, PREFORMED UOC:732, 733, 734	1
6	PAOZZ	19207	8328782	COUPLING,PIPE UOC:732, 733, 734	2
7	PAOZZ	96906	MS53007-1	PLATE, IDENTIFICATIO UOC:732, 733, 734	1
* 8	XBOZZ	19207	10950611	TUBE, BENT, METALLIC UOC:732, 733, 734	2
* 9	PAOZZ	81348	CMDX2-3PT573036	CLAMP,LOOP UOC:732, 733, 734	6
10	PAOZZ	96906	MS35338-44	WASHER, LOCK UOC:733, 734	12
11	PAOZZ	96906	MS51967-2	NUT,PLAIN, HEXAGON UOC:734	6
12	MOOZZ	19207	CPR104420-2/48	TUBE, AIR 481N. MAKE FROM HOSE P/N..... 246115 (19207) UOC:734	1
* 13	PAOZZ	19207	CPR102321-1	INSERT, TUBE FITTING UOC:731, 732, 733	8
* 14	PAOZZ	81343	6-4 100202BA	ELBOW, PIPE TO TUBE UOC:7329733, 734	4
15	MOOZZ	19207	CPR104420-2/36	TUBE, AIR 361N. MAKE FROM HOSE P/N..... 246115 (19207) UOC:734	1
16	MOOZZ	19207	CPR104420-2/84	TUBE, AIR 841N. MAKE FROM HOSE P/N 246115 (19207) UOC:734	2

END OF FIGURE

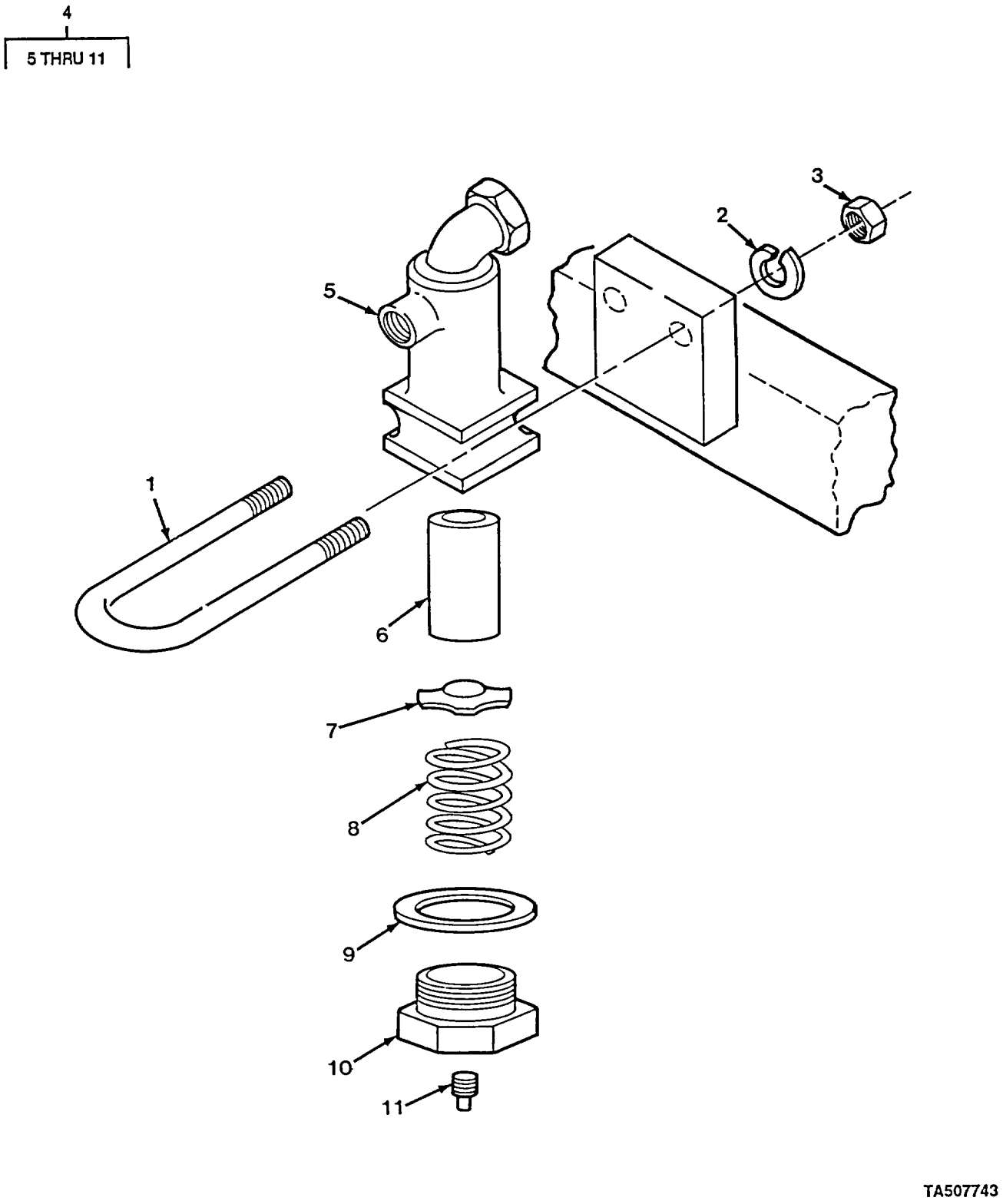

FIGURE 19. AIR FILTER ASSEMBLY.

	(1) ITEM NO	(2) SMR CODE	(3) CAGEC	(4) PART NUMBER	(5) DESCRIPTION AND USABLE ON CODES (UOC)	(6) QTY
					GROUP 1208 AIRBRAKE SYSTEM	
					FIG. 19 AIR FILTER ASSEMBLY	
	1	PAOZZ	19207	7979296	BOLT, U	2
*	2	PAOZZ	99539	CBM21389	WASHER, LOCK	4
	3	PAOZZ	96906	MS51967-2	NUT, PLAIN, HEXAGON	4
*	4	PAOZZ	23705	A298749	AIR FILTER, BRAKE LI	2
*	5	XAOZZ	19207	7415748	.ELBOW BODY, AIR LINE	1
*	6	KFOZZ	19207	7411081	.FILTER ELEMENT, FLUI PART OF KIT P/N RN13A	1
*	7	KFOZZ	19207	7979614	.WASHER, SPRING TENSI PART OF KIT P/N RN13A	1
*	8	KFOZZ	19207	7979612	.SPRING, HELICAL, COMP PART OF KIT P/N RN13A	1
*	9	KFOZZ	19207	8329823	.GASKET PART OF KIT P/N RN13A	1
	10	PAOZZ	19207	7979613	.ADAPTER BUSHING	1
	11	PAOZZ	96906	MS20913-1S	.PLUG, PIPE	1

END OF FIGURE

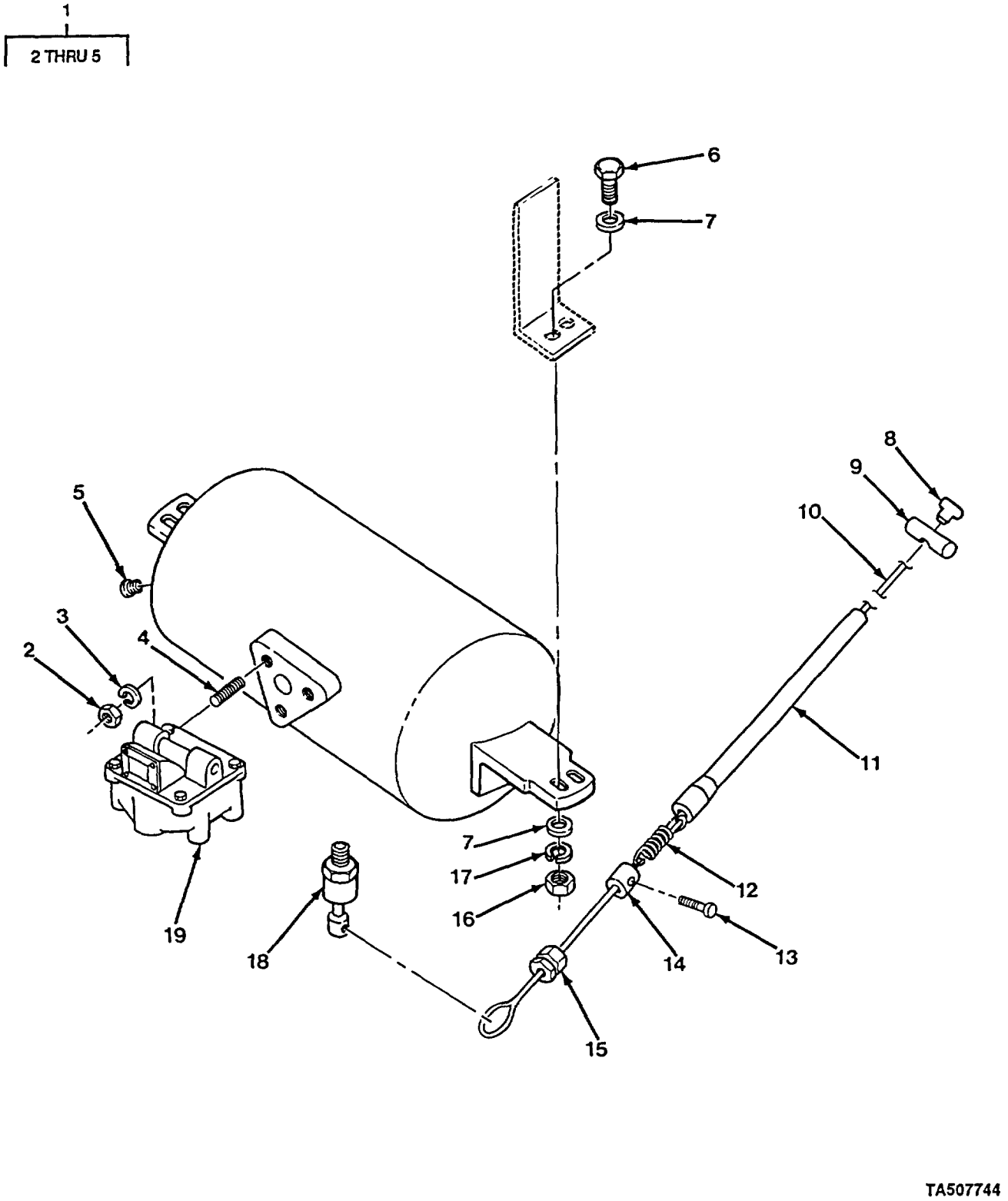

FIGURE 20. AIR RESERVOIR AND RELAY VALVE.

	(1) ITEM NO	(2) SMR CODE	(3) CAGEC	(4) PART NUMBER	(5) DESCRIPTION AND USABLE ON CODES (UOC)	(6) QTY
					GROUP 1208 AIRBRAKE SYSTEM	
					FIG. 20 AIR RESERVOIR AND RELAY VALVE	
	1	PAOZZ	19207	11636427	RESERVOIR, AIR BRAK	1
	2	PAOZZ	96906	MS51968-8	.NUT,PLAIN,HEXAGON	3
	3	PAOZZ	96906	MS35338-46	.WASHER, LOCK	3
	4	PAOZZ	12204	113247	.STUD, PLAIN	3
*	5	PAOZZ	81343	6 130109NC	.PLUG, PIPE	2
*	6	PAOZZ	80204	B1821BH038C113N	SCREW, CAP, HEXAGON H	4
	7	PAOZZ	96906	MS27183-14	WASHER,FLAT	8
	8	PAOZZ	96906	MS20664C4	BALL END, WIRE ROPE,	1
	9	PAOZZ	19207	12250283	HANDLE, BAR	1
	10	MOOZZ	81349	MIL-W-5424BX90	ROPE, WIRE MAKE FROM ROPE P/N M83420/1-006 (81349) UOC:731, 732	1
	10	MOOZZ	81349	MIL-W-5424BX102	ROPE, WIRE MAKE FROM ROPE P/N M8340/ 1-006 (81349) UOC:733	1
	10	MOOZZ	81349	MIL-W-5424BX70	ROPE, WIRE MAKE FROM ROPE P/N M83420/1-006 (81349) UOC:732, 733, 734	1
	11	PAOZZ	19207	12296282	TUBE AND FITTINGS, M UOC:731, 732, 734	1
	11	PAOZZ	19207	12296282-3	TUBE AND FITTINGS, M UOC:733	1
	12	PAOZZ	96906	MS24585-1385	SPRING, HELICAL, COMP	1
*	13	PAOZZ	80205	NAS1081-3A4	SETSCREW	1
	14	PAOZZ	19207	12250284	RETAINER, HELICAL CO	1
	15	PAOZZ	96906	MS16843-1	CLAMP, WIRE ROPE, THR	1
	16	PAOZZ	96906	MS51967-8	NUT, PLAIN, HEXAGON	4
	17	PAOZZ	96906	MS535338-46	WASHER, LOCK	4
*	18	PAOZZ	98343	121565	COOK,DRAIN	1
*	19	PAOZZ	96906	MS53004-2	PARTS KIT, RELAY VAL	1

END OF FIGURE

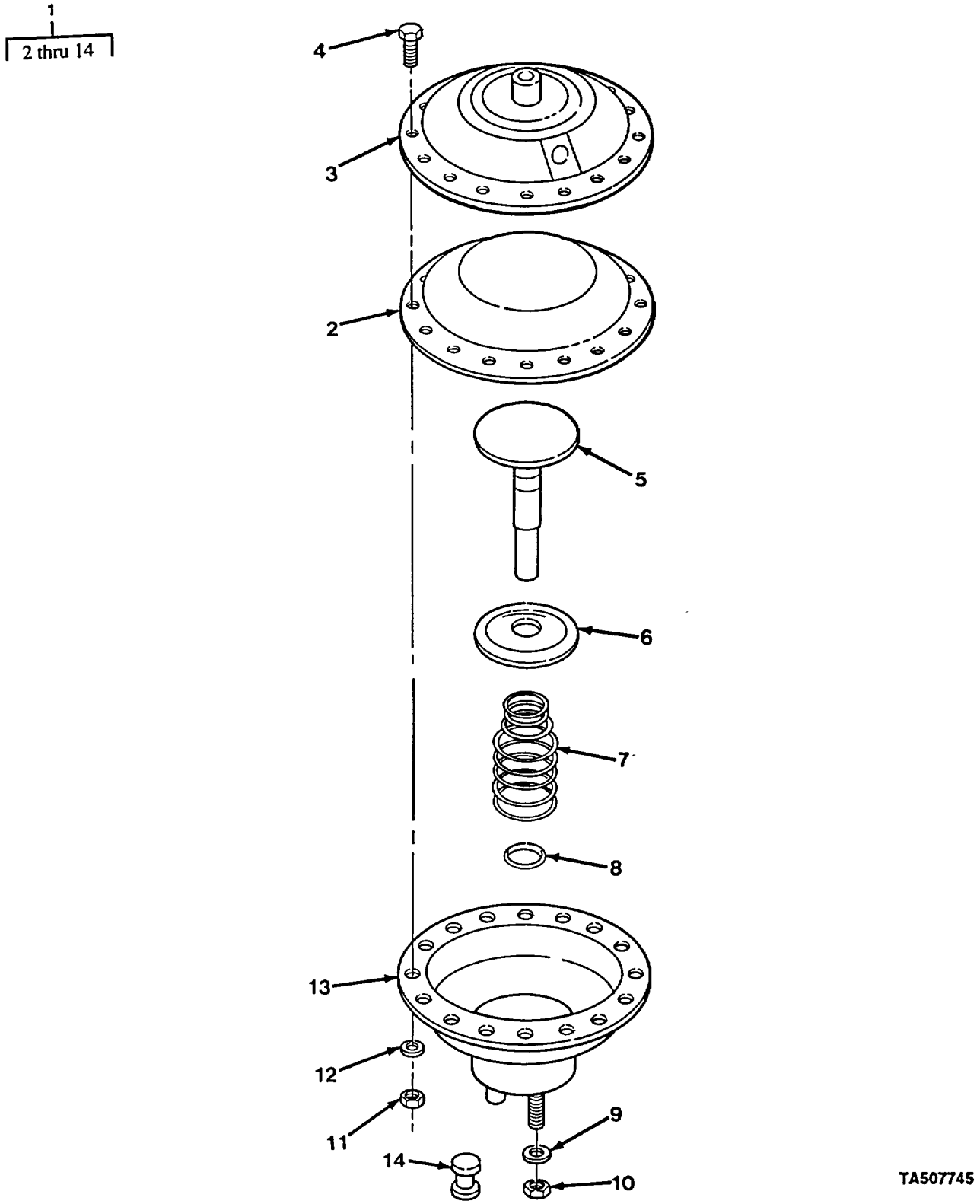

FIGURE 21. AIRBRAKE CHAMBER ASSEMBLY.

	(1) ITEM NO	(2) SMR CODE	(3) CAGEC	(4) PART NUMBER	(5) DESCRIPTION AND USABLE ON CODES (UOC)	(6) QTY
					GROUP 1208 AIRBRAKE SYSTEM	
					FIG. 21 AIRBRAKE CHAMBER ASSEMBLY	
	1	PAOZZ	23075	A298320	CHAMBER, AIR BRAKE	2
	2	PAOZZ	40342	N-2340	.DIAPHRAGM, CHAMBER, B	1
	3	PAOZZ	19207	7979602	.COVER, ACCESS	1
	4	PAOZZ	96906	MS90726-33	.BOLT, MACHINE	16
	5	PAOZZ	19207	7979599	.ROD, CHAMBER ASSEMBL	1
	6	PAOZZ	19207	7979610	.RETAINER, HELICAL CO	1
	7	PAOZZ	19207	7979608	.SPRING, HELICAL, COMP	1
*	8	PAOZZ	81349	M83461/1-012	.PACKING, PREFORMED	1
	9	PAOZZ	96906	MS35338-46	.WASHER, LOCK	3
	10	PAOZZ	96906	MS51967-8	.NUT, PLAIN, HEXAGON	3
*	11	PAOZZ	96906	MS51968-5	.NUT, PLAIN, HEXAGON	16
	12	PAOZZ	96906	MS35338-45	.WASHER, LOCK	16
	13	PAOZZ	19207	7979605	.BODY ASSEMBLY, CHAMB	1
*	14	PAOZZ	19207	8365427	.COLLAR, AIR CHAMBER	2

END OF FIGURE

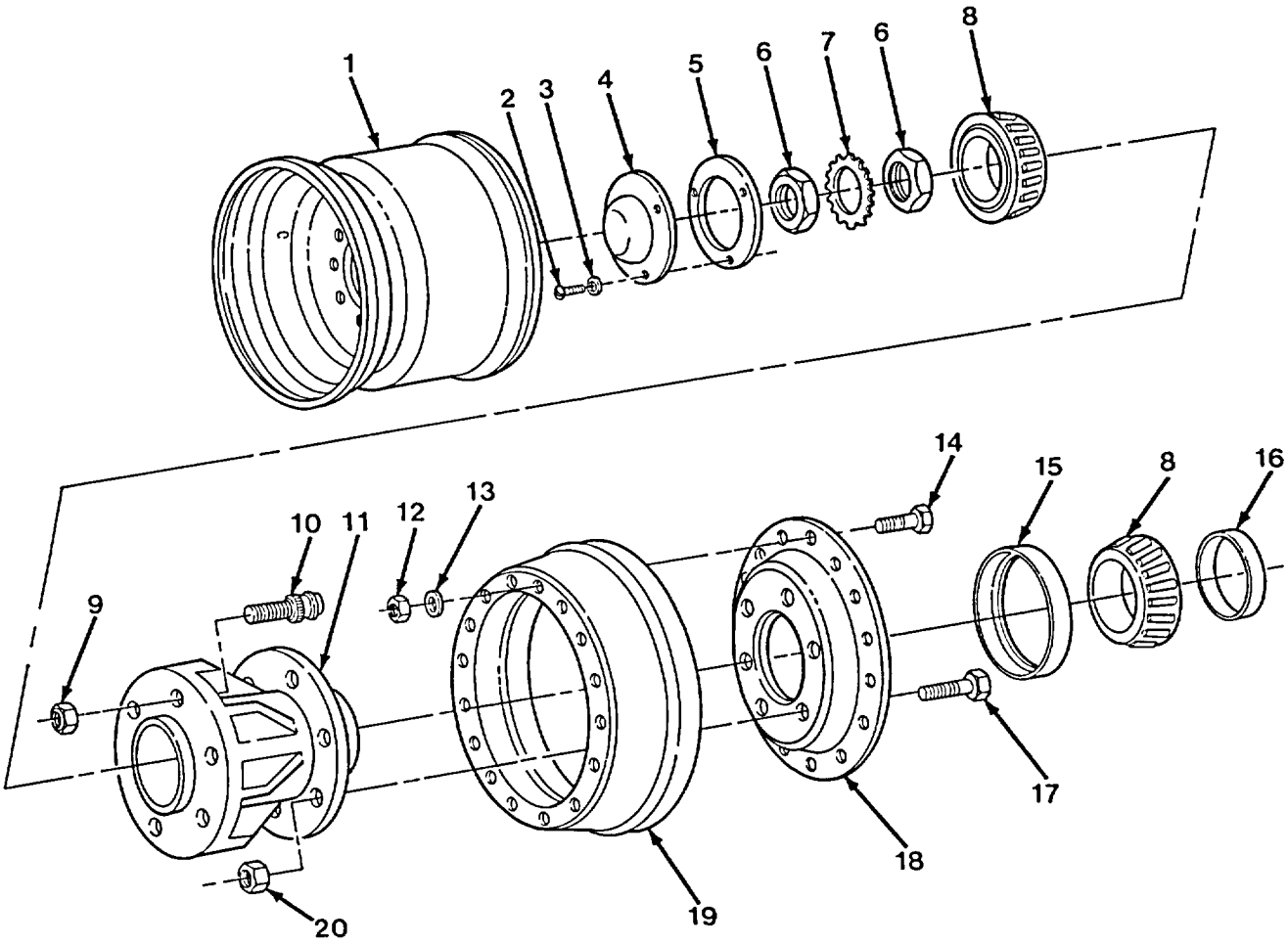

TA507746

FIGURE 22. DISC AND RIM, HUB, AND BRAKEDRUM.

	(1) ITEM NO	(2) SMR CODE	(3) CAGEC	(4) PART NUMBER	(5) DESCRIPTION AND USABLE ON CODES (UOC)	(6) QTY
					GROUP 13 WHEELS AND TRACKS	
					GROUP 1311 WHEEL ASSEMBLY	
					FIG. 22 DISC AND RIM, HUB, AND BRAKEDRUM	
	1	PAOZZ	19207	11592642	WHEEL, PNEUMATIC TIR UOC:731, 732, 733	5
*	1	PAOZZ	19207	12370096	WHEEL, PNEUMATIC TIR..... UOC:734	5
*	2	PAOZZ	96906	MS35206-281	SCREW, MACHINE UOC:7329733, 734	12
*	2	PAOZZ	96906	MS35206-281	SCREW, MACHINE PAN HEAD UOC:731	9
	3	PAOZZ	96906	MS35338-44	WASHER, LOCK UOC:732, 733, 734	12
	3	PAOZZ	96906	MS35338-44	WASHER, LOCK UOC:731	9
	4	PAOZZ	19200	6144454	HUB CAP, WHEEL..... UOC:732, 733, 734	4
	4	PAOZZ	19200	6144454	HUB CAPWHEEL..... UOC:731	3
	5	PAOZZ	19207	10910885	GASKET UOC:732, 733, 734	4
	5	PAOZZ	19207	10910885	GASKET..... UOC:731	3
	6	PAOZZ	19207	7411379	NUT, PLAIN, OCTAGON	8
	7	PAOZZ	19207	7411378	WASHER, KEY	4
	8	PAOZZ	96906	MS19081-112	BEARING, ROLLER, TAPE.....	8
	9	PAOZZ	96906	MS51983-1	NUT, PLAIN, SINGLE BA LH.....	12
	9	PAOZZ	96906	MS51983-2	NUT, PLAIN, SINGLE BA RH	12
	10	PAOZZ	96906	MS51946-1	BOLT, RIBBED SHOULDE LH.....	12
	10	PAOZZ	96906	MS51946-2	BOLT, RIBBED SHOULDE RH.....	12
	11	PAOZZ	19207	11682127-1	HUB, BODY OPTIONAL WITH P/N 1168127-..... 2.....	4
	11	PAOZZ	19207	11682127-2	HUB, BODY OPTIONAL WITH P/N..... 11682127-1	4
	12	PAOZZ	96906	MS21045-6	NUT, SELF-LOCKING, HE	72
	13	PAOZZ	96906	MS27183-14	WASHER, FLAT	72
	14	PAOZZ	19207	8720025	BOLT, RIBBED NECK	72
	15	PAOZZ	19207	7411429	SEAL, PLAIN ENCASED.	4
	16	PAOZZ	19207	7411433	SPACER, SLEEVE.....	4
	17	PAOZZ	96906	MS51946-11	BOLT, RIBBED SHOULDE.....	24
	18	PAOZZ	19207	7413231	PLATE, BACKING, BRAKE.....	4
	19	PAOZZ	19207	7411425	BRAKE DRUM.....	4
	20	PAOZZ	96906	MS35692-61	NUT, PLAIN,SLOTTED, H.....	24

END OF FIGURE

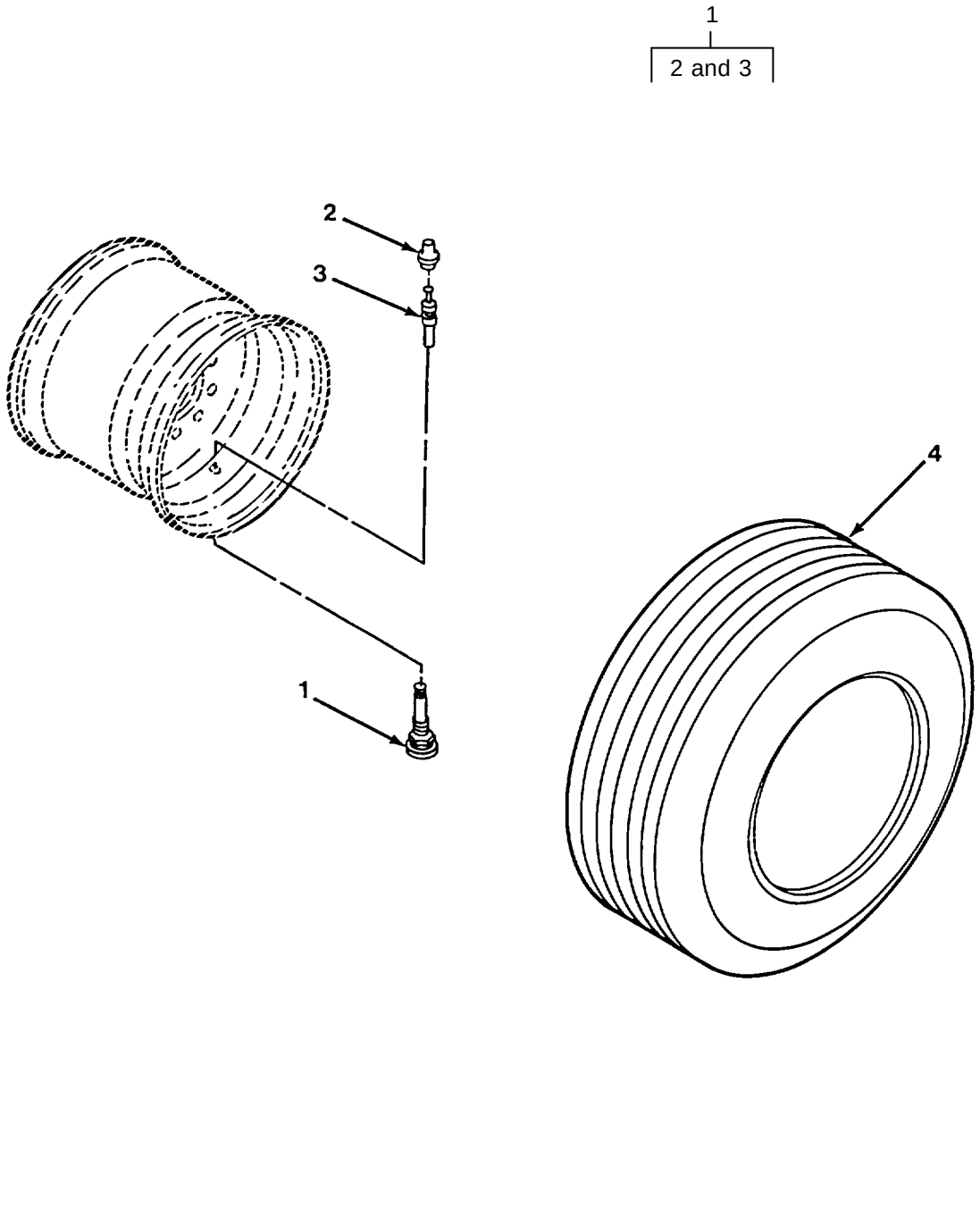

FIGURE 23. TIRE AND VALVE.

	(1) ITEM NO	(2) SMR CODE	(3) CAGEC	(4) PART NUMBER	(5) DESCRIPTION AND USABLE ON CODES (UOC)	(6) QTY
					GROUP 1313 TIRES, TUBES, TIRE CHAINS	
					FIG. 23 TIRE AND VALVE	
*	1	PAOZZ	79934	TR-501	VALVE,PNEUMATIC TIR	5
	2	PAOZZ	81348	ZZ-V-25/TIV/CL1/ TR-VC-3	.CAP,PNEUMATIC VALVE.....	5
	3	PAOZZ	27783	5888	.VALVE CORE.....	5
	4	PCOFH	81348	ZZ-T-381/GP3A/12 -165/F/TBHR	TIRE,PNEUMATIC..... UOC:731, 7329733	5
	4	PAOFZ	81348	GP3STYLXTYRACLT/ 0/11.00-17.5/H/T	TIRE, PNEUMATIC UOC:734	5

END OF FIGURE

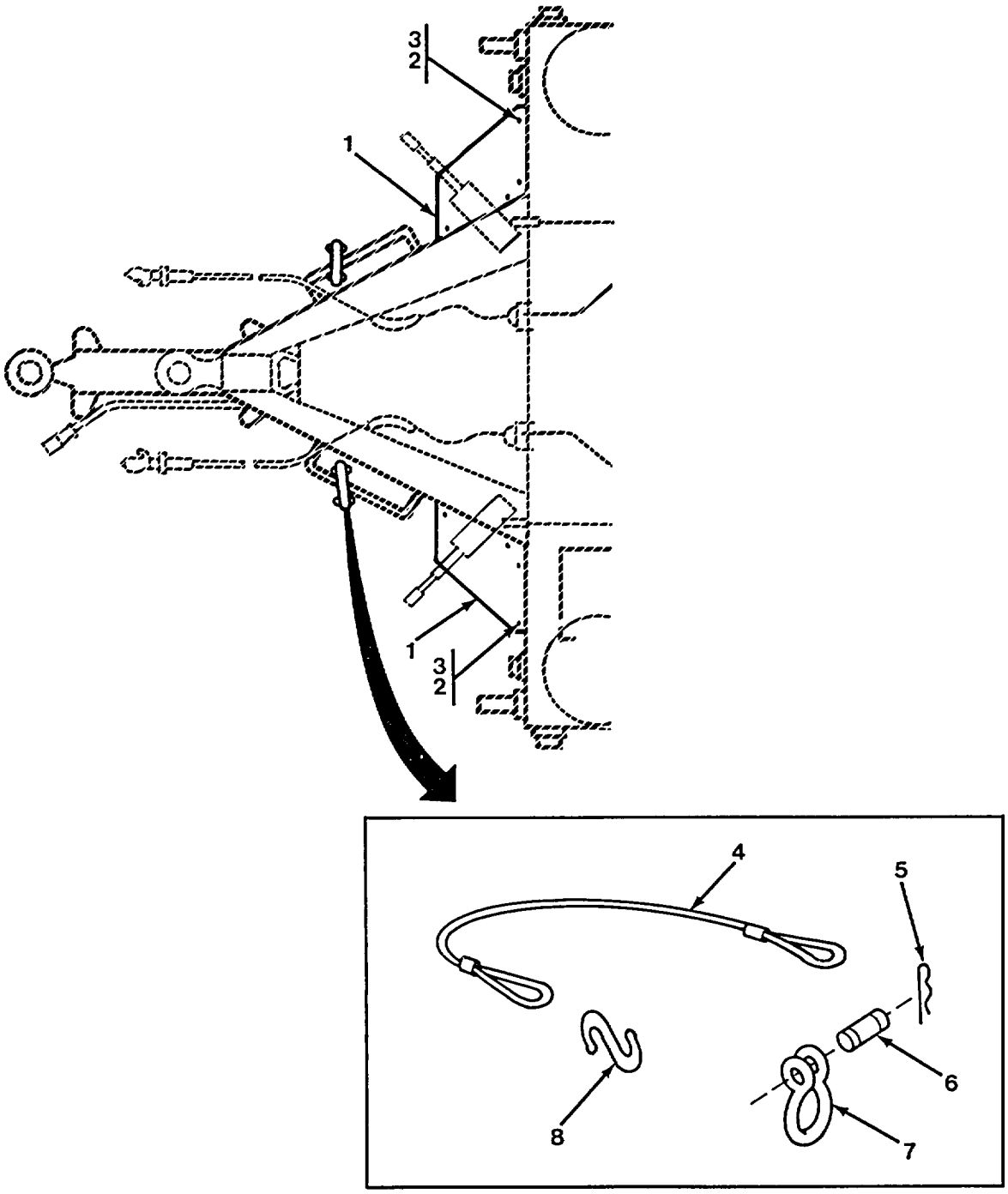

TA507748

FIGURE 24. FRAME COMPONENTS.

	(1) ITEM NO	(2) SMR CODE	(3) CAGEC	(4) PART NUMBER	(5) DESCRIPTION AND USABLE ON CODES (UOC)	(6) QTY
					GROUP 15 FRAME, TOWING ATTACHMENTS, DRAWBARS AND ARTICULATION SYSTEMS	
					GROUP 1501 FRAME ASSEMBLY	
					FIG. 24 FRAME COMPONENTS	
*	1	PFOZZ	19207	12269910	TREAD, METALLIC, NONS UOC:731, 732, 733	2
	2	PAOZZ	96906	MS35338-46	WASHER,LOCK UOC:731, 732, 733	8
	3	PAOZZ	96906	MS35206-310	SCREW, MACHINE UOC:731, 732, 733	8
	4	PAOZZ	19207	12270017-3	WIRE ROPE ASSEMBLYL..... UOC:731, 732, 733	2
	5	PAOZZ	19207	11636686-1	PIN,RETAINING..... UOC:731, 732, 733	4
	6	PAOZZ	19207	12250215-1	PIN, STRAIGHT, HEADLE UOC:731, 732, 733	2
	7	PAOZZ	19207	12296277	SHACKLE UOC:731, 732, 733	2
	8	PAOZZ	96906	MS87006-53	HOOK, CHAIN,S..... UOC:731, 732, 733	4

END OF FIGURE

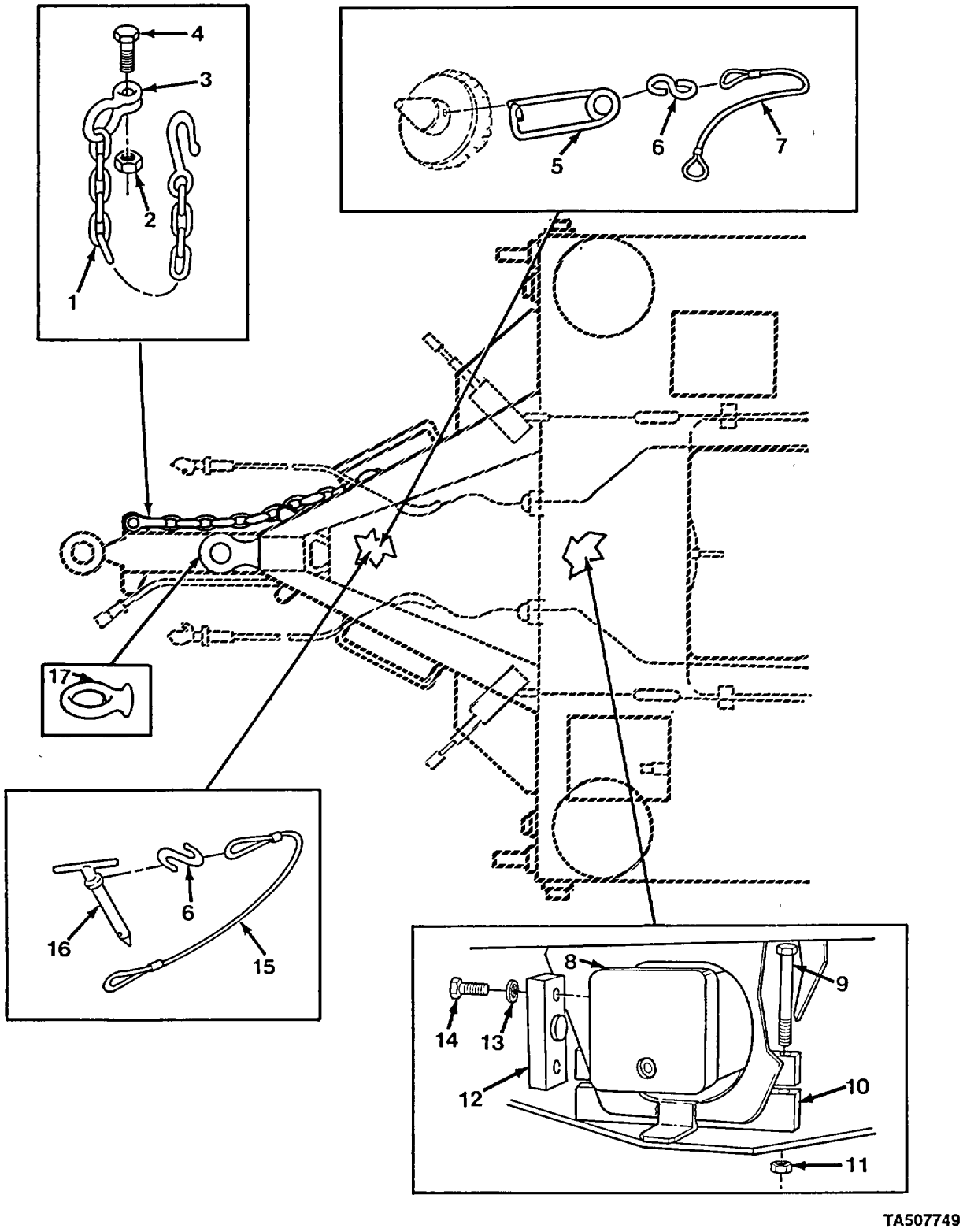

FIGURE 25. REACH TUBE AND ASSOCIATED HARDWARE.

	(1) ITEM NO	(2) SMR CODE	(3) CAGEC	(4) PART NUMBER	(5) DESCRIPTION AND USABLE ON CODES (UOC)	(6) QTY
					GROUP 1503 PINTLES AND TOWING ATTACHMENTS	
					FIG. 25 REACH TUBE AND ASSOCIATED HARDWARE	
	1	PAOZZ	19207	11636654-4	CHAIN ASSEMBLY, SING	2
	2	PAOZZ	96906	MS51922-61	NUT, SELF-LOCKING, HE UOC:733	2
*	3	PAOZZ	18876	8485436	SHACKLE UOC:731, 732, 734	2
*	3	PAOZZ	19207	10891283	SHACKLE UOC:733	2
	4	PAOZZ	80204	B1821BH075F350N	SCREW, CAP, HEXAGON H UOC:733	2
	5	PAOZZ	19207	11636686-1	PIN, RETAINING UOC:731, 732, 734	1
	6	PAOZZ	96906	MS87006-53	HOOK, CHAIN,S UOC:731, 732, 734	4
	7	PAOZZ	19207	12270017-1	WIRE ROPE ASSEMBLY, UOC:7319732, 734	1
	8	PBOZZ	19207	12314074	COUPLER, DRAWBAR, RIN UOC:731, 732	1
*	8	PFOZZ	19207	12370346	COUPLER, DRAWBAR, RIN UOC:734	1
*	9	PAOZZ	80204	B1821BH075C450N	SCREW, CAP,HEXAGON H UOC:731, 732, 734	2
*	10	PFOZZ	19207	12269915	SPACER, PLATE UOC:731, 732, 734	1
	11	PAOZZ	96906	MS51943-45	NUT, SELF-LOCKING HE UOC:731, 732, 734	2
*	12	XBOZZ	19207	12259670	STOP UOC:731, 732	1
	13	PAOZZ	96906	MS35338-46	WASHER, LOCK UOC:731, 732	2
*	14	PAOZZ	80204	B1821BH038F175N	SCREW, CAP, HEXAGON H UOC:731, 732	2
	15	PAOZZ	19207	12270017-2	WIRE ROPE ASSEMBLY UOC:731, 732, 734	1
	16	PAOZZ	19207	12259673	PIN, SHOULDER, HEADED UOC:731, 7329734	1
*	17	PAFZZ	19207	11682150	COUPLER, DRAWBAR IN UOC:731, 733, 734	1

END OF FIGURE

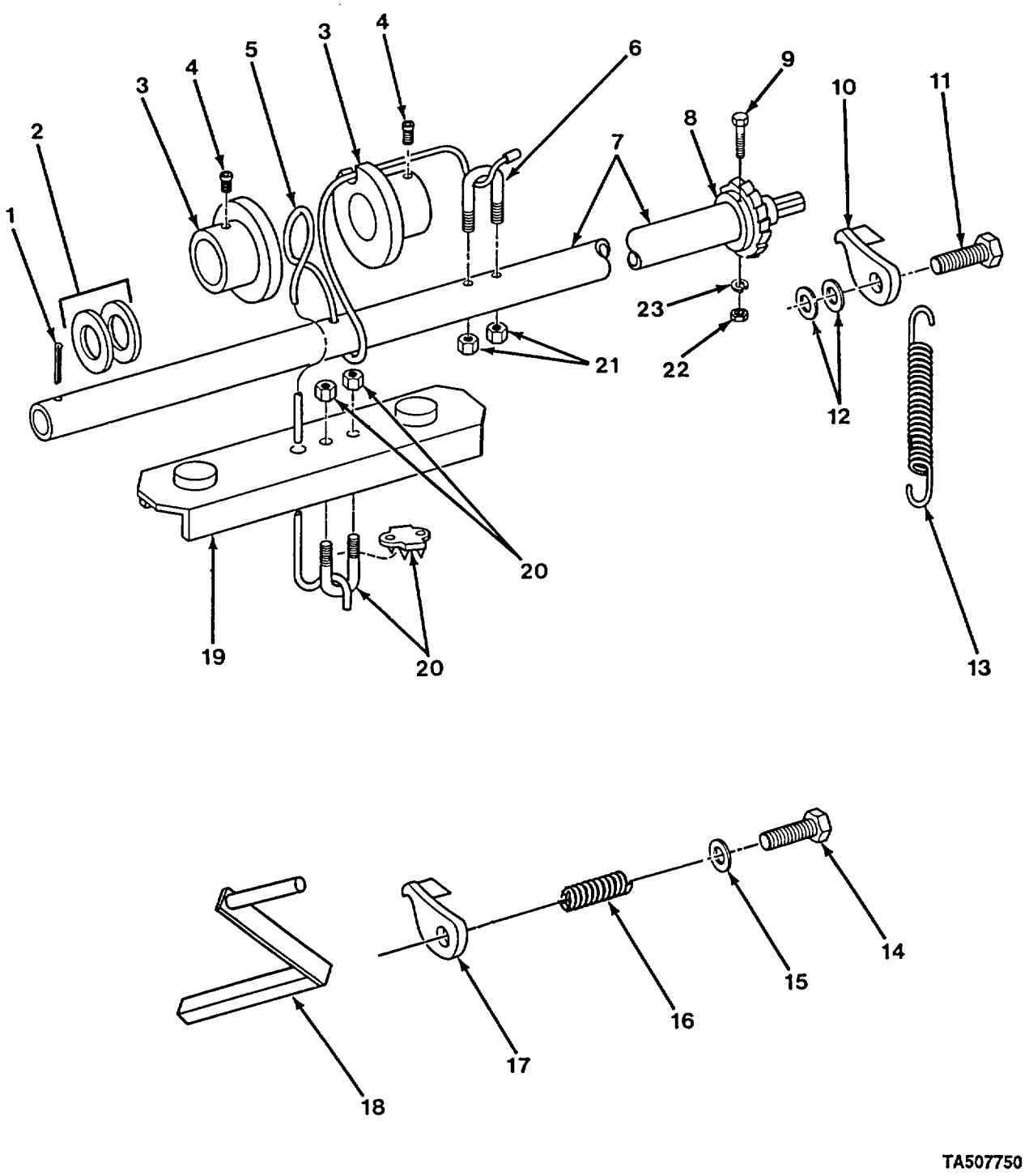

FIGURE 26. SPARE TIRE CARRIER INSTALLATION.

(1) ITEM NO	(2) SMR CODE	(3) CAGEC	(4) PART NUMBER	(5) DESCRIPTION AND USABLE ON CODES (UOC)	(6) QTY
				GROUP 1504 SPARE WHEEL CARRIER AND TIRE LOCK	
				FIG. 26 SPARE TIRE CARRIER INSTALLATION	
1	PAOZZ	96906	MS24665-498	PIN, COTTER UOC:731, 732, 733	1
2	PAOZZ	96906	MS27183-30	WASHER, FLAT.....	2
3	PFOZZ	19207	11592656	COLLAR,SHAFT.....	2
4	PAOZZ	96906	MS51965-54	SETSCREW.....	2
5	PAOZZ	19207	11636668	STRAND, WIRE	1
6	PAOZZ	19207	11636665	BOLT, U.....	1
* 7	XBOZZ	19207	11592657	SHAFT, STRAIGHT UOC:731, 732, 733	1
* 7	PAOZZ	19207	12370119	GEARSHAFT, HELICAL UOC:734	1
8	PAOZZ	19207	12370118	FLANGE, PIPE UOC:734	1
* 9	PAOZZ	80204	B1821BH025C250N	SCREW, CAP, HEXAGON H..... UOC:734	1
10	PAOZZ	19207	11636591	PAWL.....	1
11	PAOZZ	19207	11636670	BOLT, SHOULDER	1
12	PAOZZ	96906	MS27183-21	WASHER, FLAT	2
13	PAOZZ	19207	7409903	SPRING, HELICAL, EXTE	1
14	PAOZZ	19207	11636459	BOLT, SHOULDER	1
15	PAOZZ	96906	MS27183-16	WASHER,FLAT	1
* 16	PFOZZ	19207	8364009	SPRING, HELICAL,COMP	1
17	PAOZZ	19207	8364004	LATCH, RETAINING	1
18	PAOZZ	19207	10885456	CRANK, HAND UOC:731, 732, 733	1
* 18	XBOZZ	19207	12259676	HANDLE, CRANK UOC:734	1
19	PAOZZ	19207	11592666	BRACKET, MOUNTING	1
20	PAOZZ	96906	MS16842-3	CLAMP, WIRE ROPE, SAD.....	1
21	PAOZZ	96906	MS51967-2	NUT, PLAIN, HEXAGON.....	2
22	PAOZZ	96906	MS51967-2	NUT, PLAIN, HEXAGON UOC:734	1
23	PAOZZ	96906	MS35338-44	WASHER, LOCK. UOC:734	1

END OF FIGURE

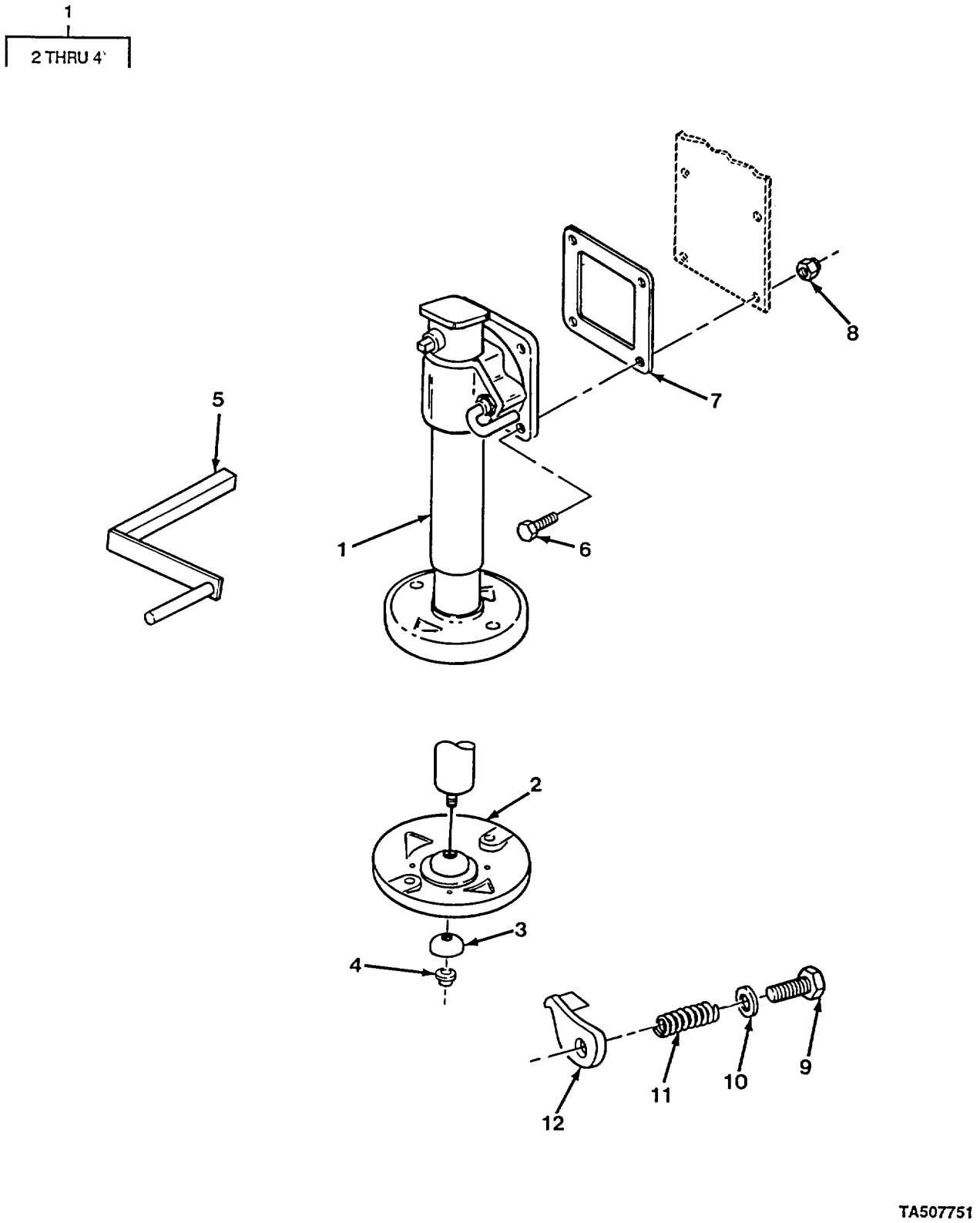

FIGURE 27. LEVELING JACK ASSEMBLY

	(1) ITEM NO	(2) SMR CODE	(3) CAGEC	(4) PART NUMBER	(5) DESCRIPTION AND USABLE ON CODES (UOC)	(6) QTY
					GROUP 1507 LANDING GEAR, LEVELING JACKS	
					FIG. 27 LEVELING JACK ASSEMBLY	
	1	PBOZZ	19207	12355851	JACK, SCREW, HAND	4
*	2	PAOZZ	19207	8005089	.SHOE, JACK SUPPORT	1
	3	PAOZZ	18876	8020015	.WASHER, SADDLE	1
	4	PAOZZ	96906	MS51922-53	.NUT, SELF-LOCKING, HE	1
*	5	PAOZZ	19207	12259676	CRANK, HAND UOC:731, 732,733	4
*	5	PAOZZ	19207	12259676-1	CRANK, HAND UOC:734	4
*	6	PAOZZ	80204	B1821BH075C250N	SCREW, CAP, HEXAGON H	16
*	7	XBOZZ	19207	11603277	GASKET	4
	8	PAOZZ	96906	MS51922-57	NUT, SELF-LOCKING,HE HEX	16
	9	PAOZZ	19207	11636459	BOLT, SHOULDER	4
	10	PAOZZ	96906	MS27183-16	WASHER, FLAT	4
*	11	PFOZZ	19207	8364009	SPRING,HELICAL,COMP	4
	12	PAOZZ	19207	8364004	LATCH, RETAINING	4

END OF FIGURE

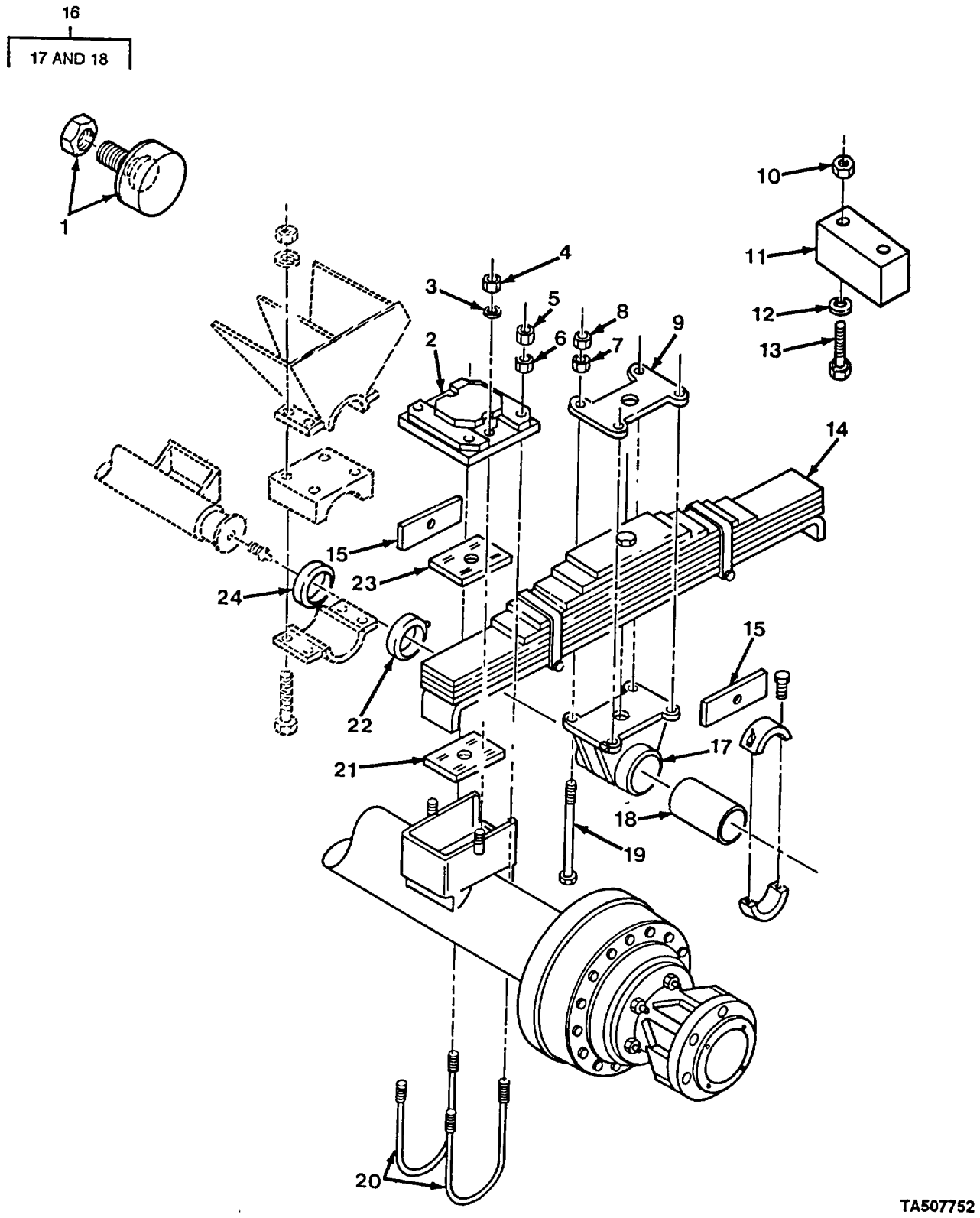

FIGURE 28. SPRING ASSEMBLY AND ATTACHING HARDWARE.

(1) ITEM NO	(2) SMR CODE	(3) CAGEC	(4) PART NUMBER	(5) DESCRIPTION AND USABLE ON CODES (UOC)	(6) QTY
				GROUP 16 SPRINGS AND SHOCK ABSORBERS	
				GROUP 1601 SPRINGS	
				FIG. 28 SPRING ASSEMBLY AND ATTACHING HARDWARE	
1	PAOZZ	19207	10914500	BUMPER, NONMETALLIC UOC:7319732	4
2	PAFZZ	19207	12269919	COVER, ACCESS UOC:731, 732	4
2	PAFZZ	19207	12269919-1	COVER, ACCESS UOC:733	4
* 2	PAFZZ	19207	12370451	COVER ASSY UOC:734	4
3	PAFZZ	96906	MS35338-48	WASHER, LOCK	8
4	PAFZZ	96906	MS51968-14	NUT, PLAIN, HEXAGON	8
5	PAFZZ	96906	MS51968-20	NUT, PLAIN, HEXAGON.....	16
6	PAFZZ	96906	MS35691-53	NUT, PLAIN, HEXAGON	16
7	PAFZZ	96906	MS51968-26	NUT, PLAIN, HEXAGON	8
8	PAFZZ	96906	MS35691-69	NUT, PLAIN, HEXAGON.....	8
* 9	PFFZZ	19207	12259777	SPACER, PLATE	2
* 10	PAOZZ	96906	MS51922-17	NUT, SELF-LOCKING, HE UOC:733, 734	8
* 11	PAOZZ	19207	12355891	BUMPER, NONMETALLIC UOC:733, 734	4
12	PAOZZ	96906	MS27183-14	WASHER,FLAT UOC:733	8
* 12	PAOZZ	96906	MS27183-15	WASHER,FLAT..... UOC:734	8
13	PAOZZ	80204	B1821BH03C175N	SCREW, CAP, HEXAGON H UOC:733	8
* 13	PAOZZ	80204	B1821BH038C250N	SCREW, CAP,HEXAGON H..... UOC:734	8
14	PBFZZ	19207	12269939	SPRING ASSEMBLY, LEA..... UOC:731, 732	2
* 14	PBFZZ	19207	12354278	SPRING ASSEMBLY, LEA UOC:733	2
* 14	PBFZZ	19207	12357900	SPRING, LEAF UOC:734	2
* 15	PAFZZ	19207	12259766	SPACER, PLATE..... UOC:731, 732	8
* 15	PAFZZ	19207	12259766-1	GASKET..... UOC:733	8
* 15	PFFZZ	19207	12259766-2	SPACER, PLATE UOC:734	8
* 16	PBFZZ	19207	12259793	BRACKET, MOUNTING	2
17	XAFZZ	19207	12259794	.BRACKET.....	1
* 18	PAFZZ	19207	12259792	.BUSHING, SLEEVE	1
19	PAFZZ	19207	12259791	SCREW, CAP,HEXAGON H..... UOC:731, 732	8
19	PAFZZ	19207	12259791-1	SCREW, CAP, HEXAGON H.....	8

(1) ITEM NO	(2) SMR CODE	(3) CAGEC	(4) PART NUMBER	(5) DESCRIPTION AND USABLE ON CODES (UOC)	(6) QTY
				UOC:733)	
19	PAFZZ	19207	12259791-2	SCREW, CAP,HEXAGON H.....	8
				UOC:734	
20	PAFZZ	19207	12259783	BOLT, U.....	1
				UOC:731, 732	
20	PAFZZ	19207	12259783-1	BOLT,U	1
				UOC:733	
* 20	PAOZZ	19207	12259783-2	BOLT, U.....	8
				UOC:734	
* 21	PAFZZ	19207	12259775	SPACER, PLATE.....	4
22	PAFZZ	19207	12269920	BEARING,WASHER, THRU	2
* 23	PAFZZ	19207	12259774	SPACER, PLATE.....	4
24	PAFZZ	19207	12259779	WASHER, FLAT	2

END OF FIGURE

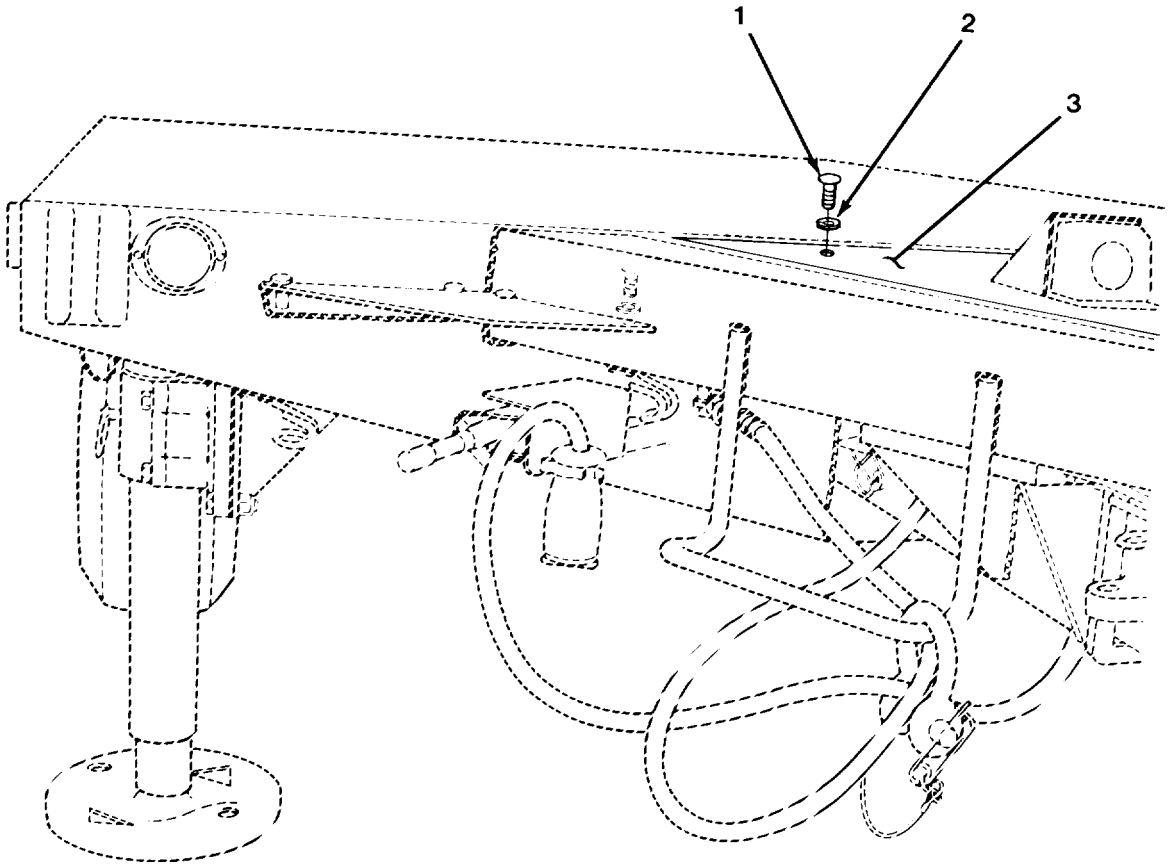

TA507753

FIGURE 29. COVERS.

(1) ITEM NO	(2) SMR CODE	(3) CAGEC	(4) PART NUMBER	(5) DESCRIPTION AND USABLE ON CODES (UOC)	(6) QTY
				GROUP 18 BODY,HOOD,AND HULL	
				GROUP 1801 BODY, CAB, HOOD, AND HULL ASSEMBLIES	
				FIG.29 COVERS	
1	PAOZZ	96906	MS35206-313	SCREW,MACHINE	4
2	PAOZZ	96906	MS35338-46	WASHER,LOCK	4
3	XBOZZ	19207	12269756	COVER UOC:731	1
3	XBOZZ	19207	12331761	COVER UOC:732,733,734	1
				END OF FIGURE	

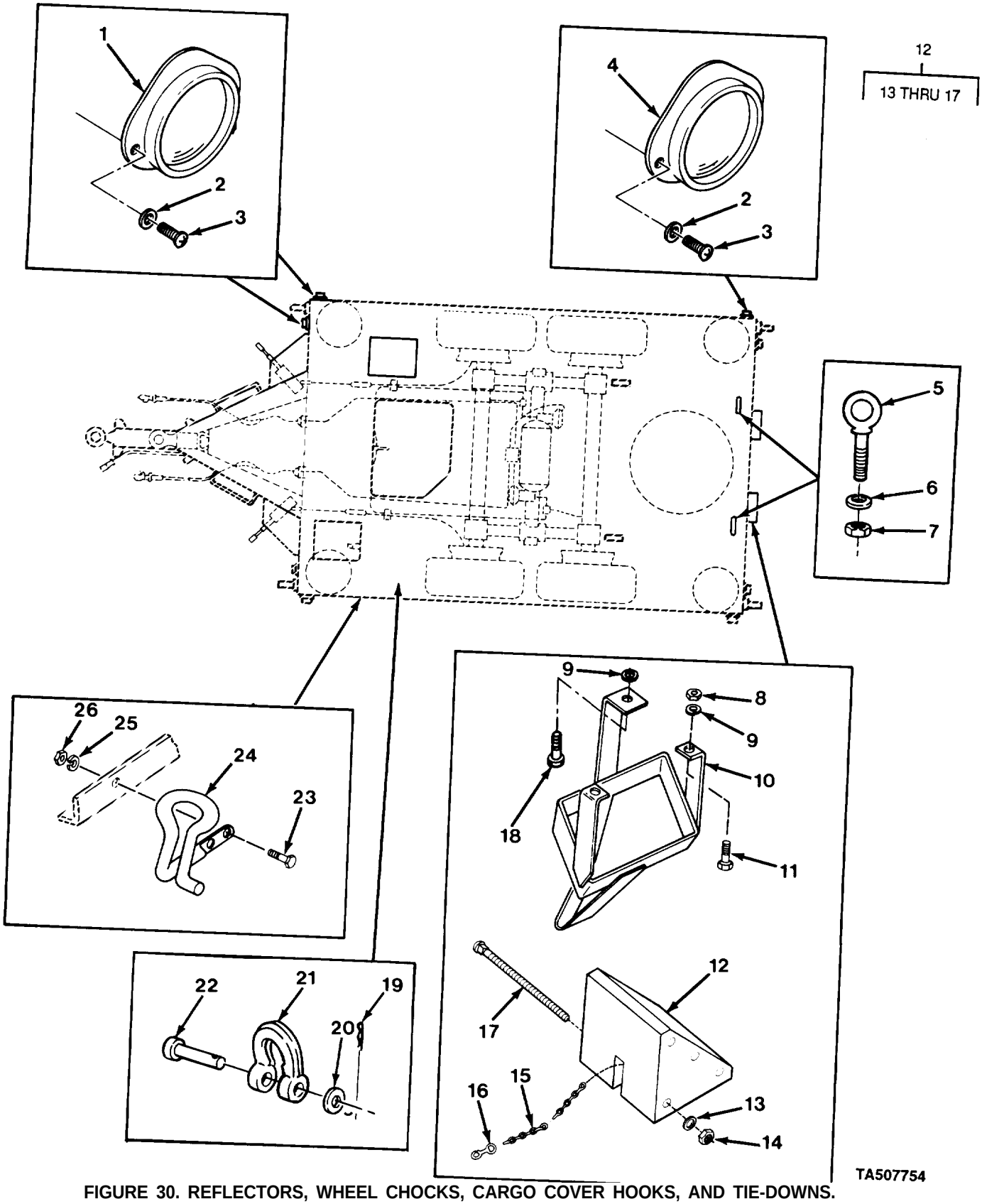

FIGURE 30. REFLECTORS, WHEEL CHOCKS, CARGO COVER HOOKS, AND TIE-DOWNS.

	(1) ITEM NO	(2) SMR CODE	(3) CAGEC	(4) PART NUMBER	(5) DESCRIPTION AND USABLE ON CODES (UOC)	(6) QTY
					GROUP 22 BODY, CHASSIS, AND HULL ACCESSORY ITEMS	
					GROUP 2202 ACCESSORY ITEMS	
					FIG. 30 REFLECTORS, WHEEL CHOCKS, CARGO COVER HOOKS, AND TIE-DOWNS	
	1	PAOZZ	96906	MS35387-2	REFLECTOR, INDICATIN AMBER	4
	2	PAOZZ	96906	MS35333-40	WASHER,LOCK	16
	3	PAOZZ	96906	MS35207-277	SCREW, MACHINE	16
	4	PAOZZ	96906	MS35387-1	REFLECTOR, INDICATIN REDO	4
*	5	PAOZZ	80205	NAS1251A25-28	BOLT,RING SWIVEL UOC:734	2
*	6	PAOZZ	96906	MS35338-51	WASHER, LOCK UOC:734	2
	7	PAOZZ	96906	MS51968-23	NUT,PLAIN, HEXAGON UOC:734	2
	8	PAOZZ	96906	MS51968-5	NUT,PLAIN, HEXAGON	4
	9	PAOZZ	96906	MS35338-45	WASHER, LOCK	6
	10	PAOZZ	19207	12354229	HOLDER ASSEMBLY, ELE	2
	11	PAOZZ	96906	MS90726-33	BOLT, MACHINE	4
*	12	PAOZZ	96906	MS52127-3	CHOCK, WHEEL TRACK	2
	13	PAOZZ	96906	MS527183-13	.WASHER, FLAT	1
	14	PAOZZ	96906	MS51967-5	.NUT, PLAIN, HEXAGON	1
	15	MOOZZ	81348	RR-C-271X102	.CHAIN HAKE FROM CHAIN P/N NAS1455- 2-14C (80205)	1
	16	PAOZZ	81349	M43770/6-M1ZE1	.SNAP HOOK	1
	17	PAOZZ	96906	MS35751-65	.BOLT, SQUARE NECK	1
	18	PAOZZ	96906	MS90727-32	BOLT, MACHINE	2
	19	PAOZZ	96906	MS24665-355	PIN, COTTER UOC:734	6
	20	PAOZZ	96906	MS27183-21	WASHER, FLAT UOC:734	6
	21	PAOZZ	19207	12357596	SHACKLE UOC:734	6
*	22	PAOZZ	19207	12357598	PIN, STRAIGHT, HEADED UOC:734	6
*	23	PAOZZ	80204	B1821BH025F088N	BOLT, MACHINE UOC:731, 732	36
*	24	PAOZZ	19207	12314105	GUY ATTACHMENT UOC:731, 732	18
	25	PAOZZ	96906	MS35338-44	WASHER, LOCK UOC:731, 732	36
	26	PAOZZ	96906	MS51968-3	NUT, PLAIN, HEXAGON UOC:731, 732	36

END OF FIGURE

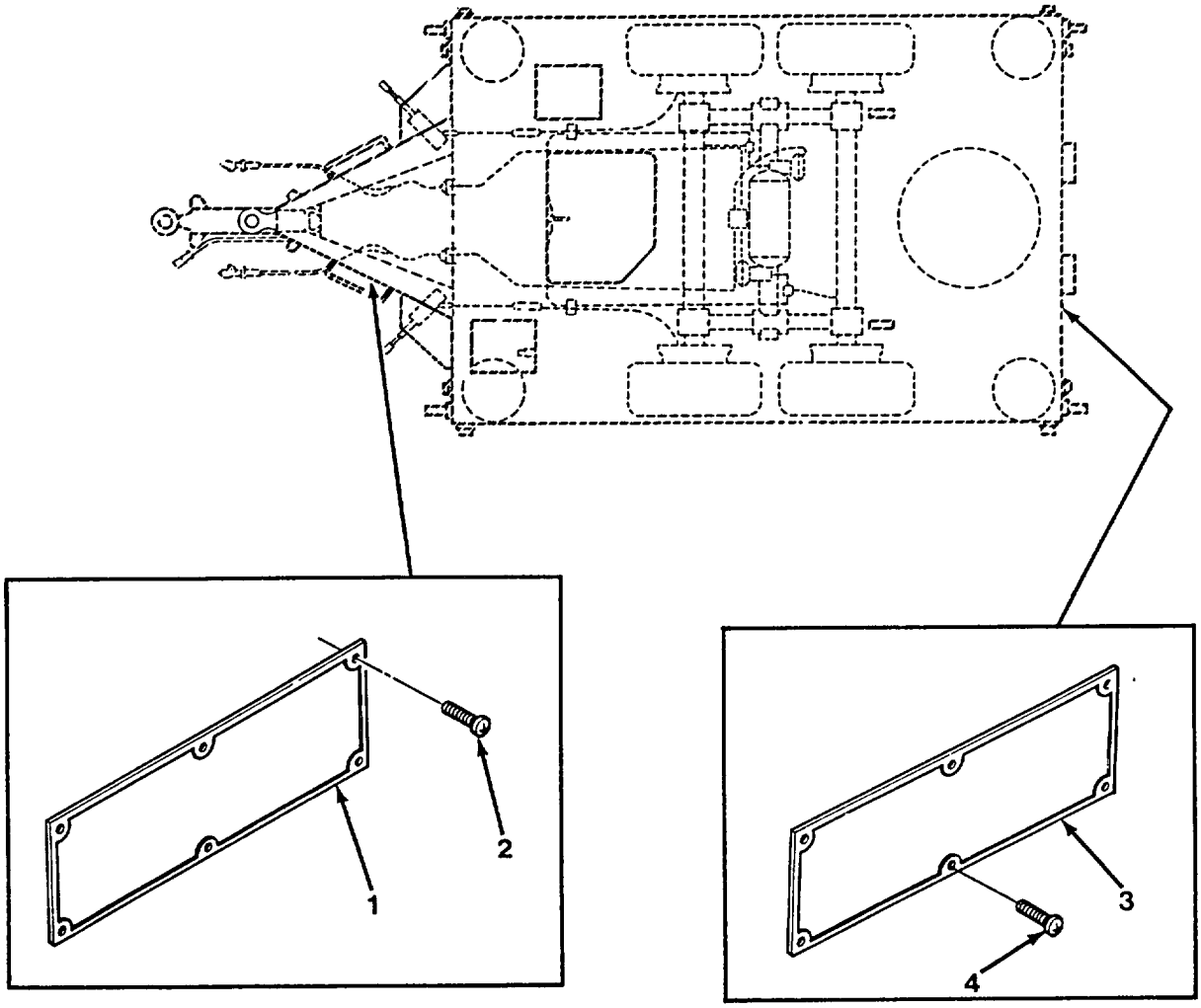

TA507755

FIGURE 31. DATA PLATES.

	(1) ITEM NO	(2) SMR CODE	(3) CAGEC	(4) PART NUMBER	(5) DESCRIPTION AND USABLE ON CODES (UOC)	(6) QTY
					GROUP 2210 DATA PLATES AND INSTRUCTION HOLDERS	
					FIG. 31 DATA PLATES	
	1	PBOZZ	19207	12269912	PLATE, IDENTIFICATIO ..... UOC: 731	1
*	1	XBOZZ	19207	12345617	IDENT. PLATE UOC:732	1
*	1	PFOZZ	19207	12331752	PLATE, IDENTIFICATIO UOC:733	1
	1	PAOZZ	19207	12370339	PLATE, IDENTIFICATIO UOC:734	1
	2	PAOZZ	96906	MS21318-57	SCREW, DRIVE	6
*	3	XBOZZ	19207	12354280	PLATE, TRANSP UOC:732	1
	4	PAOZZ	96906	MS21318-37	SCREW,DRIVE UOC:732	6

END OF FIGURE

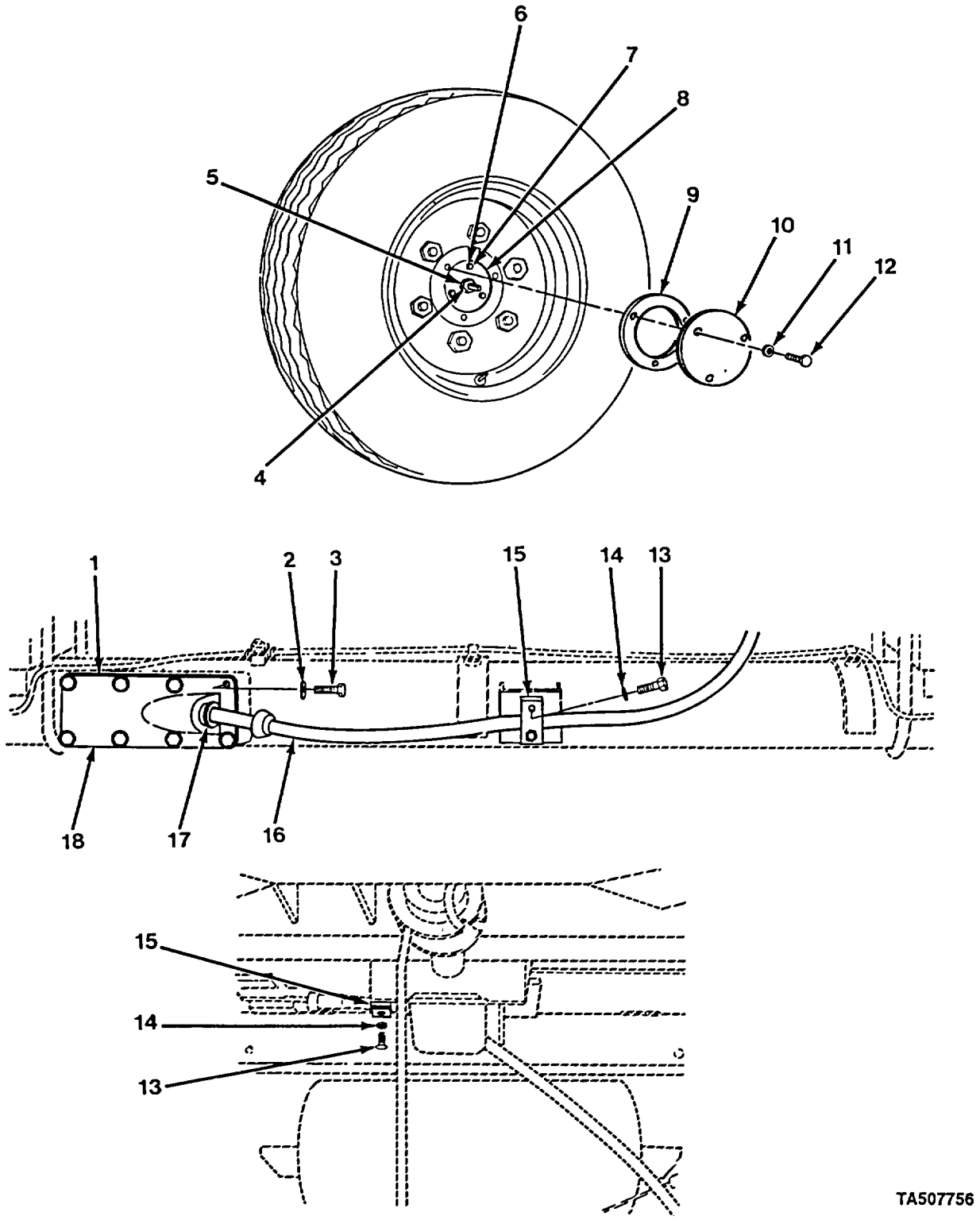

FIGURE 32. ODOMETER DRIVE (XM979).

(1) ITEM NO	(2) SMR CODE	(3) CAGEC	(4) PART NUMBER	(5) DESCRIPTION AND USABLE ON CODES (UOC)	(6) QTY
				GROUP 47 GAGES (NONELECTRICAL), WEIGHING AND MEASURING DEVICES	
				GROUP 4701 INSTRUMENTS	
				FIG. 32 ODOMETER DRIVE (XM979)	
1	PAOZZ	19207	12269604	GASKET UOC:731	1
2	PAOZZ	96906	MS35338-46	WASHER, LOCK UOC:731	8
3	PAOZZ	96906	MS90726-60	SCREW, CAP, HEXAGON H..... UOC:731	8
4	PADZZ	19207	12296281	NUT, PLAIN, HEXAGON..... UOC:731	1
5	PAOZZ	96906	MS35333-45	WASHER, LOCK UOC:731	1
6	PAOZZ	96906	MS35338-44	WASHER, LOCK UOC:731	3
7	PAOZZ	96906	MS35207-281	SCREW, MACHINE UOC:731	3
* 8	PAOZZ	19207	12269757	COVER, ACCESS UOC:731	1
9	PAOZZ	19207	12269857	GASKET UOC:731	1
10	PAOZZ	19207	12269901	COVER, ACCESS UOC:731	1
11	PAOZZ	96906	MS35338-44	WASHER, LOCK UOC:731	3
12	PAOZZ	96906	MS35206-281	SCREW, MACHINE UOC:731	3
13	PAOZZ	96906	MS90727-3	SCREW, CAP, HEXAGON H..... UOC:731	4
14	PAOZZ	96906	MS35338-44	WASHER, LOCK UOC:731	4
15	PAOZZ	19207	12269987	SPACER, PLATE..... UOC:731	2
* 16	PAOZZ	72166	A-401-8160	SHAFT, DRIVE, FLEXIBL UOC:731	1
17	PAOZZ	59730	2534	BOX CONNECTOR, ELECT UOC:731	1
18	PAOZZ	19207	12270024	PLATE, RETAINING, SHA..... UOC:731	1

END OF FIGURE

(1) ITEM NO	(2) SMR CODE	(3) CAGEC	(4) PART NUMBER	(5) DESCRIPTION AND USABLE ON CODES (UOC)	(6) QTY
				GROUP 94 REPAIR KITS	
				GROUP 9401 REPAIR KITS	
				FIG. KIT	
*	PAOZZ	40342	RN13A	PARTS KIT, FLUID PRE	2
				FILTER ELEMENT, FLUI (1) 19-6	
				GASKET (1) 19-9	
				SPRING,HELICAL,COMP (1) 19-8	
				WASHER, SPRING TENSI (1) 19-7	

END OF FIGURE

	(1) ITEM NO	(2) SMR CODE	(3) CAGEC	(4) PART NUMBER	(5) DESCRIPTION AND USABLE ON CODES (UOC)	(6) QTY
					GROUP 95 GENERAL USE STANDARDIZED PARTS	
					GROUP 9501 BULK MATERIEL	
					FIG. BULK	
	1	PAOZZ	80205	NAS1455-2-14C	CHAIN, WELDLESS	V
*	2	PFOZZ	16003	C43974	CHAIN, WELDLESS UOC:731,732,733	V
	3	PAOZZ	06853	246115	HOSE, NONMETALLIC.....	V
	4	PAOZZ	19207	7068272	ROPE, WIRE UOC:731,732	V
*	5	PAOZZ	81349	M83420/1-006	ROPE, WIRE	V
	6	PAOZZ	19207	10905840	STRAP, TIEDOWN, ELECT UOC:731,732,733	V
	7	PAOZZ	81349	M13486/1-5	WIRE, ELECTRICAL	V

END OF FIGURE

CROSS-REFERENCE INDEXES

NATIONAL STOCK NUMBER INDEX

STOCK NUMBER	FIG.	ITEM
4010-00-009-5816	BULK	1
5307-00-011-3247	20	4
5315-00-012-0123	30	19
6240-00-019-0877	1	8
6240-00-019-3093	1	5
2530-00-021-2366	20	19
2530-00-026-0200	21	14
5340-00-040-2365	3	4
6240-00-044-6914	1	4
5310-00-045-3296	11	11
	11	32
	13	26
	14	2
	14	22
5306-00-050-1238	30	18
4730-00-050-4208	5	10
5340-00-057-2890	11	12
4730-00-057-5555	20	5
5310-00-067-6356	27	8
5305-00-068-0500	2	9
	3	7
5305-00-068-0502	6	16
5306-00-068-0514	30	23
5305-00-068-0515	7	17
4730-00-069-1186	17	5
	18	1
4730-00-069-1187	17	9
	18	14
5305-00-071-1788	11	8
	13	15
5305-00-071-2513	26	9
3040-00-074-2357	9	7
4030-00-075-7212	25	3
5340-00-075-9147	28	1
5310-00-080-6004	20	7
	22	13
	28	12
5310-00-087-4652	28	10
5310-00-087-7493	30	13
9390-00-088-0581	15	3
5340-00-088-1254	2	7
2590-00-088-4271	3	1
5330-00-090-2128	17	3
	18	5
5310-00-097-6908	15	10
3110-00-100-5951	22	8
5340-00-102-5042	15	4
5330-00-105-4474	15	9
5306-00-108-0943	30	17
4820-00-116-2994	20	18
4030-00-149-5574	25	3
3040-00-150-7127	9	7
5306-00-152-0562	26	6
2530-00-152-2197	20	1
5340-00-152-2200	26	19
3040-00-152-2205	26	10
6145-00-152-6499	BULK	7
2530-00-159-8755	8	17
2530-00-159-8756	8	3
5310-00-167-0721	8	7
5340-00-168-8210	3	14
4010-00-171-4236	BULK	4
5325-00-174-9325	3	8
3040-00-178-0718	26	3
2530-00-178-0720	22	1
5340-00-178-1441	21	6
4010-00-182-8797	26	5
5306-00-182-9369	26	11
2530-00-192-8928	21	13
9905-00-202-3639	30	1
4720-00-203-9658	11	16
	13	3
2530-00-204-4800	16	1
9905-00-205-2795	30	4
5306-00-206-1560	22	17
5310-00-209-0965	11	7
	12	3
	13	16
5310-00-209-1510	32	5
4730-00-221-2136	19	11
5310-00-225-6408	27	4
5306-00-225-8496	6	7
	10	5
5306-00-225-9088	21	4
	30	11
5306-00-226-4825	6	7
5940-00-230-0515	2	4
4030-00-233-9568	26	20
5330-00-246-8223	22	5
	22	5
5305-00-253-5631	31	2
2640-00-255-9346	23	2
4030-00-262-1894	14	10
5305-00-267-8952	32	13
5305-00-269-2803	32	3
5305-00-269-3217	6	20
5305-00-269-3233	8	12
5305-00-269-3240	7	1
	7	10
5305-00-269-3241	7	4

CROSS-REFERENCE INDEXES

NATIONAL STOCK NUMBER INDEX

STOCK NUMBER	FIG.	ITEM
5305-00-269-3241	25	14
5325-00-270-8889	3	13
	17	10
4030-00-273-3079	20	8
5365-00-274-4544	10	9
	11	23
	12	10
	13	10
4730-00-278-6318	17	17
	18	6
5340-00-282-7519	11	26
	12	11
	13	11
4730-00-289-1930	14	19
4730-00-289-4937	11	17
	12	14
	13	21
2530-00-293-5139	21	1
5975-00-296-9437	32	17
5310-00-314-0764	9	11
5310-00-314-0765	9	10
4720-00-318-1016	17	1
	18	3
5310-00-322-7260	9	12
5315-00-322-7261	9	8
3040-00-330-3262	6	24
5306-00-335-4768	22	14
5310-00-341-2387	27	3
5975-00-345-8055	BULK	6
4730-00-359-0230	11	20
5306-00-383-4957	22	10
2530-00-400-2229	15	2
5310-00-407-9566	6	B
	6	8
	10	4
	21	12
	30	9
5340-00-408-9177	6	9
	6	9
5310-00-409-3333	25	11
4730-00-419-9425	10	8
	11	22
	12	9
	13	9
5330-00-462-0907	1	3
4730-00-463-1588	11	1
	12	4
	13	14
5310-00-518-5566	22	9
2530-00-522-1157	7	16
5360-00-535-1924	2	11
5305-00-543-2419	20	6
5305-00-543-2866	28	13
5310-00-550-1130	30	2
5310-00-550-3503	9	6
2640-00-555-2829	23	1
4710-00-566-7133	10	13
4710-00-566-7134	10	11
4720-00-580-7470	11	5
4730-00-580-8457	19	10
2590-00-582-5503	27	2
5310-00-582-5965	2	8
	3	5
	3	9
	6	15
	7	7
	11	25
	12	12
	13	12
	17	7
	18	10
	19	2
	22	3
	22	3
	26	23
	30	25
	32	6
	32	11
	32	14
5310-00-584-5272	28	3
5310-00-584-7888	5	3
	30	6
4010-00-585-2108	BULK	2
5310-00-594-8038	22	9
4730-00-595-0083	17	2
	18	4
2530-00-614-4454	22	4
	22	4
5310-00-627-6128	7	2
	8	13
4710-00-630-9928	10	13
5310-00-637-9541	1	10
	6	22
	20	3
	20	17
	21	9
	24	2
	25	13
	29	2
	32	2

CROSS-REFERENCE INDEXES

NATIONAL STOCK NUMBER INDEX

STOCK NUMBER	FIG.	ITEM
5310-00-641-9939	7	8
2540-00-678-3469	30	12
5340-00-679-3185	2	12
5310-00-688-2195	5	6
5340-00-689-6160	16	2
5340-00-693-0739	6	6
	6	6
2530-00-693-1007	9	1
2530-00-696-0351	KIT	
5360-00-699-9018	7	18
5360-00-700-4429	21	7
5305-00-721-5492	1	11
5305-00-724-6738	26	4
5305-00-726-2543	14	8
5305-00-726-2551	5	8
5305-00-728-5474	25	4
4730-00-729-6437	10	10
	12	7
	13	7
5310-00-732-0558	6	23
	20	16
	21	10
5310-00-732-0559	7	3
	20	2
5310-00-732-0560	28	4
5306-00-733-9239	22	10
2530-00-737-3260	10	3
2530-00-737-7783	21	2
5360-00-740-9903	26	13
5310-00-741-1378	22	7
5310-00-741-1379	22	6
2530-00-741-1425	22	19
5330-00-741-1429	22	15
5365-00-741-1433	22	16
5306-00-741-1760	7	11
4730-00-741-1903	10	12
4710-00-741-1907	10	11
2530-00-741-2050	10	2
2530-00-741-2065	10	1
2530-00-741-2068	10	2
5310-00-741-2088	10	7
	11	21
	12	8
	13	8
5365-00-741-2103	7	9
3020-00-741-2104	8	8
5315-00-741-2106	7	15
5310-00-741-2120	8	9
2530-00-741-3231	22	18
9905-00-752-4649	2	2
9905-00-752-4649	3	2
5310-00-761-6882	2	10
	3	15
	6	14
	7	13
	13	13
	18	11
	19	3
	26	21
	26	22
5310-00-763-8901	5	4
	30	7
5310-00-763-8905	5	4
	28	5
5310-00-763-8912	28	7
5340-00-764-2334	3	10
2530-00-770-9149	8	5
	8	15
5305-00-770-9150	8	16
2530-00-770-9151	8	4
5340-00-776-3264	7	14
2530-00-791-0110	8	1
2530-00-791-3259	8	1
2530-00-794-9763	7	16
2530-00-797-9295	19	4
5306-00-797-9296	19	1
2530-00-798-4812	8	2
2530-00-798-4824	8	14
5340-00-809-1492	17	8
	18	9
5340-00-809-1500	2	13
5310-00-809-4058	3	6
5310-00-809-4061	28	12
5310-00-809-4085	14	17
	26	15
	27	10
5315-00-810-3702	14	16
5305-00-812-3303	20	13
5315-00-815-8840	6	1
	6	1
5310-00-820-6653	5	3
5305-00-821-3869	28	13
5310-00-823-8803	26	12
	30	20
5310-00-832-9719	25	2
5310-00-835-2037	11	4
	28	6
4030-00-838-3533	20	15
5315-00-842-3044	6	25
	6	25

CROSS-REFERENCE INDEXES

NATIONAL STOCK NUMBER INDEX

STOCK NUMBER	FIG.	ITEM
5315-00-849-9854	26	1
5305-00-850-5841	31	4
5310-00-853-9335	8	6
5340-00-860-0533	26	18
2530-00-863-5596	6	10
	6	10
5310-00-866-4418	14	7
5310-00-880-7744	6	11
	6	11
	30	14
5310-00-880-7746	21	11
	30	8
5310-00-880-8189	11	6
	12	2
	13	17
9905-00-893-3570	2	6
5365-00-899-6723	6	21
5310-00-903-3993	9	5
2530-00-911-5378	15	7
5310-00-913-7020	30	26
4030-00-916-2141	24	8
	25	6
5305-00-922-7994	27	6
5310-00-924-4218	7	6
5330-00-930-5292	11	18
	12	15
	13	22
5305-00-940-8069	5	8
5305-00-947-4360	25	9
5305-00-952-0760	17	6
	30	3
5310-00-971-7990	28	8
2530-00-973-2355	9	9
2530-00-973-2356	9	9
5310-00-975-2075	6	3
	6	3
5310-00-982-4908	22	12
5305-00-983-7451	5	5
5310-00-983-8485	26	2
5305-00-984-5690	24	3
5305-00-984-5693	29	1
5340-00-985-0823	6	,2
	6	2
5340-00-987-2565	7	12
5305-00-988-1721	11	24
5305-00-988-1723	2	9
	3	7
5305-00-988-1725	22	2
	22	2
	32	12
5305-00-990-6444	11	10
5340-00-991-4342	7	12
5305-00-993-1848	14	1
	14	20
5305-00-993-2461	32	7
5306-00-994-8975	8	11
5305-00-995-3440	11	31
	13	25
5310-00-998-0608	22	20
9905-00-999-7369	17	16
	18	2
9905-00-999-7370	17	4
	18	7
4720-01-014-4915	BULK	3
5340-01-041-5052	2	3
5330-01-046-3300	21	8
4720-01-050-3401	11	28
	13	19
5315-01-061-4972	24	5
	25	5
4730-01-079-8821	17	12
	18	13
5340-01-082-9321	26	17
	27	12
2530-01-083-5641	8	10
5360-01-085-5570	6	12
5340-01-092-0443	20	14
5315-01-093-5341	24	6
5120-01-095-7820	20	9
4730-01-098-1669	14	21
4030-01-109-1432	14	29
5310-01-109-6746	6	5
	6	5
2640-01-111-5467	23	3
4030-01-114-3895	14	27
5306-01-131-2887	30	5
5340-01-141-4814	21	3
3040-01-144-8031	5	1
5360-01-149-1679	26	16
	27	11
5306-01-160-4479	26	14
	27	9
1095-01-162-0352	21	5
1095-01-162-0359	32	18
5340-01-162-0361	28	2
5340-01-162-0362	28	16
5340-01-162-0363	5	7
2510-01-162-0365	24	1
4030-01-162-0366	30	24
5315-01-165-4884	25	16

CROSS-REFERENCE INDEXES

NATIONAL STOCK NUMBER INDEX

STOCK NUMBER	FIG.	ITEM
5365-01-165-4977	28	9
2540-01-166-0201	6	13
2540-01-166-0202	6	13
5340-01-166-0204	32	8
5340-01-167-3584	32	10
5365-01-167-4609	28	15
9905-01-168-0522	31	1
5306-01-169-6987	28	20
3120-01-169-6990	28	22
4010-01-169-6994	25	7
4010-01-169-6995	25	1
4030-01-169-6996	24	7
5365-01-169-7022	28	23
5365-01-169-7023	25	10
5310-01-170-2107	32	4
5340-01-171-0056	27	5
1095-01-171-0203	22	11
2530-01-171-0208	4	3
4010-01-171-6044	24	4
5306-01-171-8750	6	4
5340-01-171-8830	5	9
5365-01-171-8950	28	21
4010-01-172-7685	25	15
5305-01-172-7739	28	19
5340-01-172-7862	28	14
1095-01-172-9560	22	11
5310-01-174-0553	28	24
5330-01-174-1563	32	1
5365-01-175-4311	32	15
5330-01-176-2016	32	9
2590-01-191-5917	16	3
1095-01-195-3572	15	1
1095-01-195-3573	15	6
4730-01-195-3577	11	29
	13	5
2540-01-195-3578	25	8
1095-01-195-6481	15	8
4820-01-196-4078	11	30
	13	4
4730-01-196-7856	11	2
	13	24
5340-01-198-8768	14	6
5360-01-201-6925	20	12
2610-01-204-4488	23	4
4010-01-205-9337	BULK	5
4610-01-208-5831	14	24
4730-01-210-0338	14	14
5340-01-220-0125	28	2
5977-01-220-0128	30	10
9905-01-220-0143	31	1
2530-01-220-0173	4	2
3120-01-230-0032	28	18
5340-01-231-5359	14	23
4710-01-242-1001	11	9
4710-01-242-1002	11	34
	12	1
	13	1
4710-01-242-4899	11	3
4710-01-242-4900	20	11
2530-01-242-7977	14	32
4730-01-243-3489	11	13
4710-01-243-3664	11	19
	13	6
4710-01-243-3665	14	18
2530-01-243-7156	15	11
5340-01-243-9656	30	16
5315-01-245-0854	14	15
5360-01-245-3934	15	12
5360-01-245-3939	14	13
5306-01-245-7186	14	12
2610-01-256-0080	23	4
5995-01-257-6445	3	1
3040-01-257-7679	14	31
2530-01-257-7702	14	9
3040-01-257-7709	14	11
4720-01-259-8822	12	6
4720-01-259-8823	12	13
4730-01-260-6916	15	5
5330-01-262-7911	28	15
5306-01-262-7926	6	4
5305-01-263-3814	28	19
5306-01-264-6371	28	20
2510-01-273-4464	28	14
4710-01-273-5903	20	11
5975-01-273-8133	3	11
6220-01-284-2709	1	9
9905-01-291-2971	31	1
5360-01-291-2977	28	14
6220-01-297-3217	1	7
4730-01-305-3220	26	8
3040-01-305-3314	26	7
5306-01-305-3869	6	4
3040-01-305-5898	6	19
5315-01-305-6274	30	22
5340-01-305-6333	28	11
2530-01-305-9979	22	1
5310-01-306-1624	6	26
3040-01-306-6476	6	18
5340-01-309-4628	5	2
4710-01-309-6211	13	20

CROSS-REFERENCE INDEXES

NATIONAL STOCK NUMBER INDEX

STOCK NUMBER	FIG.	ITEM	STOCK NUMBER	FIG.	ITEM
2540-01-311-0209	25	8			
4030-01-312-5982	30	21			
5120-01-322-6502	27	1			
6220-01-359-2870	1	2			
2540-01-370-5892	25	17			
6220-01-372-3883	1	1			
2520-01-382-5835	5	1			

CROSS-REFERENCE INDEXES

PART NUMBER INDEX

CAGEC	PART NUMBER	STOCK NUMBER	FIG.	ITEM
72166	A-401-8160		32	16
88044	AN100C8	4030-00-262-1894	14	10
78500	AI-3236M1261	2530-00-791-3259	8	1
23075	A298320	2530-00-293-5139	21	1
23705	A298749	2530-00-797-9295	19	4
23705	A298819	4720-00-203-9658	11	16
78500	A8-3222W855	2530-00-693-1007	9	1
80204	81821BH025C250N	5305-00-071-2513	26	9
80204	81821BH025F088N	5306-00-068-0514	30	23
80204	BI8821BH025FI00N	5305-00-068-0515	7	17
80204	B1821BH03C175N	5305-00-821-3869	28	13
80204	B1821BH031C075N	5306-00-226-4825	6	7
80204	81821BH038C063N	5305-00-721-5492	1	11
80204	81821BH038C113N	5305-00-543-2419	20	6
80204	81821BH038C250N	5305-00-543-2866	28	13
80204	B1821BH038F150N	5305-00-269-3240	7	1
80204	B1821BH3B8F175N	5305-00-269-3241	7	4
			25	14
80204	B1821BH044C125N	5305-00-071-1788	11	8
			13	15
80204	B1821BH075C250N	5305-00-922-7994	27	6
80204	81821BH075C450N	5305-00-947-4360	25	9
80204	B1821BH075F350N	5305-00-728-5474	25	4
99539	CBM21389	5310-00-582-5965	2	8
			3	5
			3	9
			6	15
			17	7
			19	2
81348	CMDX2-3PT573036	5340-00-809-1492	17	8
			18	9
19207	CPR102321-1	4730-01-079-8821	17	12
			18	13
19207	CPR104420-2/36		18	15
19207	CPR104420-2/48		18	12
19207	CPR104420-2/84		18	16
19207	CPR104420X102		17	14
19207	CPR104420X24		17	13
19207	CPR104420X36		17	11
16003	C43974	4010-00-585-2108	BULK	2
57771	D3103	5340-01-198-8768	14	6
57771	D4286		14	5
63477	FC-11409	4730-00-359-0230	11	20
63477	FC-13030	5310-00-741-2088	11	21
63477	FE14240	2530-00-204-4800	16	1
81348	GP3STYLXTYRACLT/ 0/11.00-17.5/H/T	2610-01-256-0080	23	4
81349	MIL-W-5424BX102		20	10
81349	MIL-W-5424BX70		20	10
81349	MIL-W-54248X90		20	10
96906	MS15003-1	4730-00-050-4208	5	10

CROSS-REFERENCE INDEXES

PART NUMBER INDEX

CAGEC	PART NUMBER	STOCK NUMBER	FIG.	ITEM
96906	MS15570-1251	6240-00-019-0877	1	8
96906	MS15570-623	6240-00-019-3093	1	5
96906	MS16536-175		9	3
96906	MS16562-38	5315-00-810-3702	14	16
96906	MS16842-3	4030-00-233-9568	26	20
96906	M516843-1	4030-00-838-3533	20	15
96906	MS16998-77	5305-00-983-7451	5	5
96906	MS19081-112	3110-00-100-5951	22	8
96906	MS20664C4	4030-00-273-3079	20	8
96906	MS20913-1S	4730-00-221-2136	19	11
96906	MS21045-6	5310-00-982-4908	22	12
96906	MS21318-37	5305-00-850-5841	31	4
96906	MS21318-57	5305-00-253-5631	31	2
96906	MS21333-104	5340-00-088-1254	2	7
96906	MS21333-107	5340-00-809-1500	2	13
96906	MS21333-3	5340-00-057-2890	11	12
96906	MS21333-34	5340-00-282-7519	11	26
			12	11
			13	11
96906	MS21919WCG-28	5340-01-231-5359	14	23
96906	MS24585-1385	5360-01-201-6925	20	12
96906	MS24665-283	5315-00-842-3044	6	25
			6	25
96906	MS24665-355	5315-00-012-0123	30	19
96906	MS24665-498	5315-00-849-9854	26	1
96906	MS25036-154	5940-00-230-0515	2	4
96906	MS27183-10	5310-00-809-4058	3	6
96906	MS27183-13	5310-00-087-7493	30	13
96906	MS27183-14	5310-00-080-6004	20	7
			22	13
			28	12
96906	MS27183-15	5310-00-809-4061	28	12
96906	MS27183-16	5310-00-809-4085	14	17
			26	15
			27	10
96906	MS27183-21	5310-00-823-8803	26	12
			30	20
96906	MS27183-30	5310-00-983-8485	26	2
96906	MS27183-58	5310-01-306-1624	6	26
96906	MS27952-32	5310-01-109-6746	6	5
			6	5
96906	MS3367-3	5975-01-273-8133	3	11
96906	MS35206-277	5305-00-988-1721	11	24
96906	MS35206-279	5305-00-988-1723	2	9
			3	7
96906	MS35206-281	5305-00-988-1725	22	2
			22	2
			32	12
96906	MS35206-310	5305-00-984-5690	24	3
96906	MS35206-313	5305-00-984-5693	29	1
96906	MS35207-261	5305-00-990-6444	11	10

CROSS-REFERENCE INDEXES

PART NUMBER INDEX

CAGEC	PART NUMBER	STOCK NUMBER	FIG.	ITEM
96906	MS35207-265	5305-00-993-1848	14	1
			14	20
96906	MS35207-270	5305-00-995-3440	11	31
			13	25
96906	M535207-277	5305-00-952-0760	17	6
			30	3
96906	MS35207-281	5305-00-993-2461	32	7
96906	MS35333-40	5310-00-550-1130	30	2
96906	MS35333-41	5310-00-167-0721	8	7
96906	MS35333-45	5310-00-209-1510	32	5
96906	MS35335-35	5310-00-627-6128	7	2
			8	13
96906	MS35335-36	5310-00-550-3503	9	6
96906	MS35338-43	5310-00-045-3296	11	11
			11	32
			13	26
			14	2
			14	22
96906	MS35338-44	5310-00-582-5965	7	7
			11	25
			12	12
			13	12
			18	10
			22	3
			22	3
			26	23
			30	25
			32	6
			32	11
			32	14
96906	MS35338-45	5310-00-407-9566	6	8
			6	8
			10	4
			21	12
			30	9
96906	MS35338-46	5310-00-637-9541	1	10
			6	22
			20	3
			20	17
			21	9
			24	2
			25	13
			29	2
			32	2
96906	MS35338-47	5310-00-209-0965	11	7
			12	3
			13	16
96906	MS35338-48	5310-00-584-5272	28	3
96906	MS35338-50	5310-00-820-6653	5	3
96906	MS35338-51	5310-00-584-7888	5	3
			30	6

CROSS-REFERENCE INDEXES

PART NUMBER INDEX

CAGEC	PART NUMBER	STOCK NUMBER	FIG.	ITEM
96906	MS35387-1	9905-00-205-2795	30	4
96906	MS35387-2	9905-00-202-3639	30	1
96906	MS35478-1683	6240-00-044-6914	1	4
96906	MS35489-107	5325-00-174-9325	3	8
96906	MS35489-81	5325-00-270-8889	3	13
			17	10
96906	MS35691-13	5310-00-853-9335	8	6
96906	MS35691-21	5310-00-975-2075	6	3
			6	3
96906	MS35691-53	5310-00-835-2037	11	4
			28	6
96906	MS35691-69	5310-00-971-7990	28	8
96906	MS35692-61	5310-00-998-0608	22	20
79146	M535746-1	4730-00-595-0083	17	2
			18	4
96906	MS35748-1	5330-00-090-2128	17	3
			18	5
96906	MS35751-65	5306-00-108-0943	30	17
96906	MS35810-4	5315-00-815-8840	6	1
			6	1
96906	MS35812-4	5340-00-985-0823	6	2
			6	2
96906	MS39232-6	4730-01-098-1669	14	21
96906	MS51844-24	4030-01-109-1432	14	29
96906	MS51844-26	4030-01-114-3895	14	27
96906	MS51848-12	5310-00-688-2195	5	6
96906	MS51879-3	4730-01-210-0338	14	14
96906	MS51922-17	5310-00-087-4652	28	10
96906	MS51922-53	5310-00-225-6408	27	4
96906	MS51922-57	5310-00-067-6356	27	8
96906	MS51922-61	5310-00-832-9719	25	2
96906	MS51939-1	5340-00-764-2334	3	10
96906	MS551943-45	5310-00-409-3333	25	11
96906	MS51946-1	5306-00-733-9239	22	10
96906	MS51946-11	5306-00-206-1560	22	17
96906	MS51946-2	5306-00-383-4957	22	10
96906	MS51965-54	5305-00-724-6738	26	4
96906	MS51967-11	5310-00-880-8189	11	6
			12	2
			13	17
96906	MS51967-2	5310-00-761-6882	2	10
			3	15
			6	14
			7	13
			13	13
			18	11
			19	3
			26	21
			26	22
96906	MS51967-5	5310-00-880-7744	6	11
			6	11

CROSS-REFERENCE INDEXES

PART NUMBER INDEX

CAGEC	PART NUMBER	STOCK NUMBER	FIG.	ITEM
96906	MS51967-5	5310-00-880-7744	30	14
96906	MS51967-8	5310-00-732-0558	6	23
			20	16
			21	10
96906	MS51968-14	5310-00-732-0560	28	4
96906	MS51968-20	5310-00-763-8905	5	4
			28	5
96906	MS51968-23	5310-00-763-8901	5	4
			30	7
96906	MS51968-26	5310-00-763-8912	28	7
96906	MS51968-3	5310-00-913-7020	30	26
96906	MS51968-5	5310-00-880-7746	21	11
			30	8
96906	MS51968-8	5310-00-732-0559	7	3
			20	2
96906	MS551970-1	5310-00-924-4218	7	6
96906	MS51970-4	5310-00-903-3993	9	5
96906	MS51983-1	5310-00-518-5566	22	9
96906	M551983-2	5310-00-594-8038	22	9
96906	MS52127-3	2540-00-678-3469	30	12
96906	MS53004-2	2530-00-021-2366	20	19
96906	MS553007-1	9905-00-999-7370	17	4
			18	7
96906	MS53007-2	9905-00-999-7369	17	16
			18	2
96906	MS53060-6	2530-00-863-5596	6	10
			6	10
96906	MS87006-53	4030-00-916-2141	24	8
			25	6
96906	MS90725-3	5305-00-068-0500	2	9
			3	7
96906	MS90725-31	5306-00-225-8496	6	7
			10	5
96906	MS90725-6	5305-00-068-0502	6	16
96906	MS90725-67	5305-00-269-3217	6	20
96906	MS90726-33	5306-00-225-9088	21	4
			30	11
96906	MS90726-60	5305-00-269-2803	32	3
96906	MS90727-160	5305-00-726-2543	14	8
96906	MS90727-164	5305-00-726-2551	5	8
96906	MS90727-197	5305-00-940-8069	5	8
96906	MS90727-3	5305-00-267-8952	32	13
96906	MS90727-31L	5306-01-245-7186	14	12
96906	MS90727-32	5306-00-050-1238	30	18
96906	MS90727-57	5305-00-269-3233	8	12
96906	MS90727-64	5305-00-269-3240	7	10
81349	M13486/1-5	6145-00-152-6499	BULK	7
81349	M13486/1-5-148		3	3
81349	M13486/1-5-173		3	3
81349	M13486/1-5-190		3	3
81349	M13486/1-5X5.5		2	5

CROSS-REFERENCE INDEXES

PART NUMBER INDEX

CAGEC	PART NUMBER	STOCK NUMBER	FIG.	ITEM
81349	M13486/1-5X7		2	5
81349	M43436/1-1	9905-00-752-4649	2	2
			3	2
81349	M43436/1-3	9905-00-893-3570	2	6
81349	M43770/6-M1ZE1	5340-01-243-9656	30	16
81349	M83420/1-006	4010-01-205-9337	BULK	5
81349	M83461/1-012	5330-01-046-3300	21	8
40342	N-2340	2530-00-737-7783	21	2
80205	NAS1081-3A4	5305-00-812-3303	20	13
80205	NAS1251A25-28	5306-01-131-2887	30	5
80205	NAS1455-2-14C	4010-00-009-5816	BULK	1
06721	N13448	4720-00-318-1016	17	1
			18	3
40342	RN13A	2530-00-696-0351	KIT	
81348	RR-C-271X102		30	15
79934	TR-501	2640-00-555-2829	23	1
81348	ZZ-T-381/GP3A/12 -165/F/TBHR	2610-01-204-4488	23	4
81348	ZZ-V-25/TIV/CL1/ TR-VC-3	2640-00-255-9346	23	2
19207	10885456	5340-00-860-0533	26	18
19207	10891263-1		2	1
19207	10891283	4030-00-075-7212	25	3
19207	10905840	5975-00-345-8055	BULK	6
19200	10910174-7	5310-00-866-4418	14	7
19207	10910885	5330-00-246-8223	22	5
			22	5
19207	10914500	5340-00-075-9147	28	1
19207	10950594-1	5306-01-305-3869	6	4
19207	10950594-2	5306-01-171-8750	6	4
19207	10950594-3	5306-01-262-7926	6	4
19207	10950594-4		6	17
19207	10950611		17	15
			18	8
19207	10950652-1	2540-01-166-0201	6	13
19207	10950652-2	2540-01-166-0202	6	13
79470	112-06007	4730-00-289-4937	11	17
12204	113247	5307-00-011-3247	20	4
19207	11592642	2530-00-176-0720	22	1
19207	11592656	3040-00-178-0718	26	3
19207	11592657		26	7
19207	11592666	5340-00-152-2200	26	19
19207	11597761	5360-01-085-5570	6	12
19207	11603277		27	7
19207	11636427	2530-00-152-2197	20	1
19207	11636459	5306-01-160-4479	26	14
			27	9
19207	11636512	5340-00-168-8210	3	14
19207	11636591	3040-00-152-2205	26	10
19207	11636654-4	4010-01-169-6995	25	1
19207	11636665	5306-00-152-0562	26	6

CROSS-REFERENCE INDEXES

PART NUMBER INDEX

CAGEC	PART NUMBER	STOCK NUMBER	FIG.	ITEM
19207	11636668	4010-00-182-8797	26	5
19207	11636670	5306-00-182-9369	26	11
19207	11636686-1	5315-01-061-4972	24	5
			25	5
19207	11636714	2590-00-088-4271	3	1
19207	11636714-1	5995-01-257-6445	3	1
19207	11636714-2		3	1
19207	11639519-2	5330-00-462-0907	1	3
19207	11669743	4730-01-196-7856	11	2
			13	24
19207	11669744	4730-01-195-3577	11	29
			13	5
19207	11669750	2530-01-242-7977	14	32
19207	11682127-1	1095-01-172-9560	22	11
19207	11682127-2	1095-01-171-0203	22	11
19207	11682150	2540-01-370-5892	25	17
98343	121565	4820-00-116-2994	20	18
19207	12250215-1	5315-01-093-5341	24	6
19207	12250283	5120-01-095-7820	20	9
19207	12250284	5340-01-092-0443	20	14
19207	12259670		25	12
19207	12259673	5315-01-165-4884	25	16
19207	12259676		26	18
		5340-01-171-0056	27	5
19207	12259676-1		27	5
19207	12259766	5365-01-167-4609	28	15
19207	12259766-1	5330-01-262-7911	28	15
19207	12259766-2		28	15
19207	12259773	5340-01-162-0363	5	7
19207	12259774	5365-01-169-7022	28	23
19207	12259775	5365-01-171-8950	28	21
19207	12259777	5365-01-165-4977	28	9
19207	12259779	5310-01-174-0553	28	24
19207	12259783	5306-01-169-6987	28	20
19207	12259783-1	5306-01-264-6371	28	20
19207	12259783-2		28	20
19207	12259791	5305-01-172-7739	28	19
19207	12259791-1	5305-01-263-3814	28	19
19207	12259791-2		28	19
19207	12259792	3120-01-230-0032	28	18
19207	12259793	5340-01-162-0362	28	16
19207	12259794		28	17
19207	12269604	5330-01-174-1563	32	1
19207	12269756		29	3
19207	12269757	5340-01-166-0204	32	8
19207	12269857	5330-01-176-2016	32	9
19207	12269901	5340-01-167-3584	32	10
19207	12269910	2510-01-162-0365	24	1
19207	12269912	9905-01-168-0522	31	1
19207	12269915	5365-01-169-7023	25	10
19207	12269919	5340-01-162-0361	28	2

CROSS-REFERENCE INDEXES

PART NUMBER INDEX

CAGEC	PART NUMBER	STOCK NUMBER	FIG.	ITEM
19207	12269919-1	5340-01-220-0125	28	2
19207	12269920	3120-01-169-6990	28	22
19207	12269927	3040-01-144-8031	5	1
19207	12269927-1	2520-01-382-5835	5	1
19207	12269939	5340-01-172-7862	28	14
19207	12269944	2530-01-171-0208	4	3
19207	12269987	5365-01-175-4311	32	15
19207	12270005		11	15
			12	5
			13	2
19207	12270014	4710-01-242-1002	11	34
			12	1
			13	1
19207	12270017-1	4010-01-169-6994	25	7
19207	12270017-2	4010-01-172-7685	25	15
19207	12270017-3	4010-01-171-6044	24	4
19207	12270024	1095-01-162-0359	32	18
19207	12296263	5340-01-171-8830	5	9
19207	12296263-1		5	9
19207	12296271		4	1
19207	12296277	4030-01-169-6996	24	7
19207	12296281	5310-01-170-2107	32	4
19207	12296282	4710-01-242-4900	20	11
19207	12296282-3	4710-01-273-5903	20	11
19207	12313049		11	27
			13	18
19207	12313050	4710-01-243-3664	11	19
			13	6
19207	12314057		14	4
19207	12314058		14	3
19207	12314063	1095-01-195-6481	15	8
19207	12314065	2530-01-257-7702	14	9
19207	12314066	4710-01-242-4899	11	3
19207	12314067	4710-01-242-1001	11	9
19207	12314068		11	35
19207	12314069		11	14
19207	12314070		11	33
19207	12314074	2540-01-195-3578	25	8
19207	12314081		14	25
19207	12314081-1		14	26
19207	12314105	4030-01-162-0366	30	24
19207	12331693	3040-01-257-7709	14	11
19207	12331696	3040-01-257-7679	14	31
19207	12331699	5360-01-245-3939	14	13
19207	12331701	4710-01-243-3665	14	18
19207	12331702	5315-01-245-0854	14	15
19207	12331704		14	28
19207	12331704-1		14	30
19207	12331725-1	2590-01-191-5917	16	3
19207	12331747	2530-01-220-0173	4	2
19207	12331747-1		4	2

CROSS-REFERENCE INDEXES

PART NUMBER INDEX

CAGEC	PART NUMBER	STOCK NUMBER	FIG.	ITEM
19207	12331752	9905-01-220-0143	31	1
19207	12331761		29	3
19207	12345617		31	1
19207	12354229	5977-01-220-0128	30	10
19207	12354237	2530-01-243-7156	15	11
19207	12354238	5360-01-245-3934	15	12
19207	12354278	2510-01-273-4464	28	14
19207	12354280		31	3
19207	12355851	5120-01-322-6502	27	1
19207	12355891	5340-01-305-6333	28	11
19207	12357596	4030-01-312-5982	30	21
19207	12357598	5315-01-305-6274	30	22
19207	12357900	5360-01-291-2977	28	14
19207	12357969	5340-01-309-4628	5	2
19207	12360850-1	6220-01-284-2709	1	9
19207	12360870-2	6220-01-297-3217	1	7
19207	12370092	3040-01-305-5898	6	19
19207	12370093	3040-01-306-6476	6	18
19207	12370096	2530-01-305-9979	22	1
19207	12370118	4730-01-305-3220	26	8
19207	12370119	3040-01-305-3314	26	7
19207	12370320	4710-01-309-6211	13	20
19207	12370339	9905-01-291-2971	31	1
19207	12370346	2540-01-311-0209	25	8
19207	12370451		28	2
19207	12375837	6220-01-372-3883	1	1
19207	12375838		1	6
19207	12375841	6220-01-359-2870	1	2
02686	123917	2530-00-973-2355	9	9
19200	143450	4730-01-243-3489	11	13
62144	18A-849210-000	4610-01-208-5831	14	24
06853	246115	4720-01-014-4915	BULK	3
59730	2534	5975-00-296-9437	32	17
81343	3-2 0401028A	4730-00-289-1930	14	19
81343	4 130109CB		13	23
91816	462B-2PPP	4820-01-196-4078	11	30
			13	4
19207	5156636	5330-00-930-5292	11	18
			12	15
			13	22
19207	5167679	4730-00-463-1588	11	1
			12	4
			13	14
93072	52133-9	4730-01-260-6916	15	5
19207	5298653	5365-00-274-4544	10	9
			11	23
			12	10
			13	10
19207	5303461	5340-00-408-9177	6	9
			6	9
19207	5323088	5310-00-641-9939	7	8

CROSS-REFERENCE INDEXES

PART NUMBER INDEX

CAGEC	PART NUMBER	STOCK NUMBER	FIG.	ITEM
93072	57504	5310-00-097-6908	15	10
93072	580342	5330-00-105-4474	15	9
16128	580376	2530-00-911-5378	15	7
93072	580546	2530-00-400-2229	15	2
27783	5888	2640-01-111-5467	'23	3
81343	6 130109NC	4730-00-057-5555	20	5
81343	6-4 100202BA	4730-00-069-1187	17	9
			18	14
81343	6-4 120102BA	4730-00-069-1186	17	5
			18	1
19200	6144454	2530-00-614-4454	22	4
			22	4
93072	621001	9390-00-088-0581	15	3
93072	622020	5340-00-102-5042	15	4
93072	622812	1095-01-195-3572	15	1
93072	622813	1095-01-195-3573	15	6
19207	7001762	5360-00-535-1924	2	11
19207	7064979		9	4
19207	7068272	4010-00-171-4236	BULK	4
19207	7373260	2530-00-737-3260	10	3
19207	7392815	3040-00-330-3262	6	24
19207	7409903	5360-00-740-9903	26	13
19207	7411023	4720-00-203-9658	13	3
19207	7411081		19	6
19207	7411378	5310-00-741-1378	22	7
19207	7411379	5310-00-741-1379	22	6
19207	7411425	2530-00-741-1425	22	19
19207	7411429	5330-00-741-1429	22	15
19207	7411433	5365-00-741-1433	22	16
19207	7411760	5306-00-741-1760	7	11
19207	7411903	4730-00-741-1903	10	12
19207	7411907	4710-00-741-1907	10	11
19207	7412050	2530-00-741-2050	10	2
19207	7412065	2530-00-741-2065	10	1
19207	7412068	2530-00-741-2068	10	2
19207	7412079	4730-00-729-6437	10	10
			12	7
			13	7
19207	7412088	5310-00-741-2088	10	7
			12	8
			13	8
19207	7412103	5365-00-741-2103	7	9
19207	7412104	3020-00-741-2104	8	8
19207	7412106	5315-00-741-2106	7	15
19207	7412120	5310-00-741-2120	8	9
19207	7413231	2530-00-741-3231	22	18
19207	7415748		19	5
19207	7745464	4730-00-419-9425	10	8
			11	22
			12	9
			13	9

CROSS-REFERENCE INDEXES

PART NUMBER INDEX

CAGEC	PART NUMBER	STOCK NUMBER	FIG.	ITEM
19207	7979296	5306-00-797-9296	19	1
19207	7979599	1095-01-162-0352	21	5
19207	7979602	5340-01-141-4814	21	3
19207	7979605	2530-00-192-8928	21	13
19207	7979608	5360-00-700-4429	21	7
19207	7979610	5340-00-178-1441	21	6
19207	7979612		19	8
19207	7979613	4730-00-580-8457	19	10
19207	7979614		19	7
19207	7979699	5340-00-689-6160	16	2
19207	8005089	2590-00-582-5503	27	2
18876	8020015	5310-00-341-2387	27	3
19207	8328782	4730-00-278-6318	17	17
			18	6
19207	8329823		19	9
19207	8331946	5340-00-693-0739	6	6
			6	6
19207	8336701		7	5
19207	8336702		7	5
19207	8336704	2530-00-770-9149	8	5
			8	15
19207	8336705	5305-00-770-9150	8	16
19207	8336789	2530-00-770-9151	8	4
19207	8347213	5340-00-040-2365	3	4
19207	8347216	5340-01-041-5052	2	3
19207	8363978	5340-00-679-3185	2	12
19207	8363981-1	4720-01-050-3401	11	28
			13	19
19207	8363981-2	4720-01-259-8822	12	6
19207	8363981-3	4720-01-259-8823	12	13
19207	8364004	5340-01-082-9321	26	17
			27	12
19207	8364009	5360-01-149-1679	26	16
			27	11
19207	8365390	4730-00-289-4937	12	14
			13	21
19207	8365427	2530-00-026-0200	21	14
19207	8380781	4720-00-580-7470	11	5
18876	8485436	4030-00-149-5574	25	3
19207	8699500	5365-00-899-6723	6	21
19207	8720025	5306-00-335-4768	22	14
19207	8720331	5306-00-994-8975	8	11
19207	8720515	5360-00-699-9018	7	18
19207	8720517		9	2
19207	8724501-AR		3	12
19207	8733890	5340-00-991-4342	7	12
19207	8733891	5340-00-987-2565	7	12
19207	8733892	2530-00-522-1157	7	16
21450	8733893	2530-00-794-9763	7	16
19207	8733896	2530-00-798-4824	8	14
19207	8733897	2530-00-798-4812	8	2

CROSS-REFERENCE INDEXES

PART NUMBER INDEX

CAGEC	PART NUMBER	STOCK NUMBER	FIG.	ITEM
19207	8733898		10	6
19207	8733899		10	6
19207	8733902	2530-00-791-0110	8	1
19207	8733908	2530-00-159-8755	8	17
19207	8733909	2530-00-159-8756	8	3
19207	8733912	2530-00-973-2356	9	9
19207	8733918	4710-00-630-9928	10	13
19207	8733920	4710-00-566-7133	10	13
19207	8733922	4710-00-566-7134	10	11
19207	8733926	3040-00-150-7127	9	7
19207	8733927	3040-00-074-2357	9	7
19207	8733932		8	10
19207	8733933	2530-01-083-5641	8	10
19207	8733935	5310-00-314-0764	9	11
19207	8733936	5310-00-314-0765	9	10
19207	8733937	5310-00-322-7260	9	12
19207	8733938	5315-00-322-7261	9	8
19207	8735729	5340-00-776-3264	7	14

CROSS-REFERENCE INDEXES

FIGURE AND ITEM NUMBER INDEX

FIG.	ITEM	STOCK NUMBER	CAGEC	PART NUMBER
BULK	1	4010-00-009-5816	80205	NAS1455-2-14C
BULK	2	4010-00-585-2108	16003	C43974
BULK	3	4720-01-014-4915	06853	246115
BULK	4	4010-00-171-4236	19207	7068272
BULK	5	4010-01-205-9337	81349	M83420/1-006
BULK	6	5975-00-345-8055	19207	10905840
BULK	7	6145-00-152-6499	81349	M13486/1-5
KIT		2530-00-696-0351	40342	RN13A
1	1	6220-01-372-3883	19207	12375837
1	2	6220-01-359-2870	19207	12375841
1	3	5330-00-462-0907	19207	11639519-2
1	4	6240-00-044-6914	96906	MS35478-1683
1	5	6240-00-019-3093	96906	MS15570-623
1	6		19207	12375838
1	7	6220-01-297-3217	19207	12360870-2
1	8	6240-00-019-0877	96906	MS15570-1251
1	9	6220-01-284-2709	19207	12360850-1
1	10	5310-00-637-9541	96906	MS35338-46
1	11	5305-00-721-5492	80204	B1821BH038C063N
2	1		19207	10891263-1
2	2	9905-00-752-4649	81349	M43436/1-1
2	3	5340-01-041-5052	19207	8347216
2	4	5940-00-230-0515	96906	MS25036-154
2	5		81349	M13486/1-5X5.5
2	5		81349	M13486/1-5X7
2	6	9905-00-893-3570	81349	M43436/1-3
2	7	5340-00-088-1254	96906	MS21333-104
2	8	5310-00-582-5965	99539	CBM21389
2	9	5305-00-068-0500	96906	MS90725-3
2	9	5305-00-988-1723	96906	MS35206-279
2	10	5310-00-761-6882	96906	MS51967-2
2	11	5360-00-535-1924	19207	7001762
2	12	5340-00-679-3185	19207	8363978
2	13	5340-00-809-1500	96906	MS21333-107
3	1		19207	11636714-2
3	1	2590-00-088-4271	19207	11636714
3	1	5995-01-257-6445	19207	11636714-1
3	2	9905-00-752-4649	81349	M43436/1-1
3	3		81349	M13486/1-5-148
3	3		81349	M13486/1-5-173
3	3		81349	M13486/1-5-190
3	4	5340-00-040-2365	19207	8347213
3	5	5310-00-582-5965	99539	CBM21389
3	6	5310-00-809-4058	96906	MS527183-10
3	7	5305-00-068-0500	96906	MS90725-3
3	7	5305-00-988-1723	96906	MS535206-279
3	8	5325-00-174-9325	96906	MS35489-107
3	9	5310-00-582-5965	99539	CBM21389
3	10	5340-00-764-2334	96906	MS51939-1
3	11	5975-01-273-8133	96906	M5S3367-3
3	12		19207	8724501-AR

CROSS-REFERENCE INDEXES

FIGURE AND ITEM NUMBER INDEX

FIG.	ITEM	STOCK NUMBER	CAGEC	PART NUMBER
3	13	5325-00-270-8889	96906	MS35489-81
3	14	5340-00-168-8210	19207	11636512
3	15	5310-00-761-6882	96906	MS51967-2
4	1		19207	12296271
4	2		19207	12331747-1
4	2	2530-01-220-0173	19207	12331747
4	3	2530-01-171-0208	19207	12269944
5	1	2520-01-382-5835	19207	12269927-1
5	1	3040-01-144-8031	19207	12269927
5	2	5340-01-309-4628	19207	12357969
5	3	5310-00-584-7888	96906	MS35338-51
5	3	5310-00-820-6653	96906	MS35338-50
5	4	5310-00-763-8901	96906	MS51968-23
5	4	5310-00-763-8905	96906	MS51968-20
5	5	5305-00-983-7451	96906	MS16998-77
5	6	5310-00-688-2195	96906	MS51848-12
5	7	5340-01-162-0363	19207	12259773
5	8	5305-00-726-2551	96906	MS90727-164
5	8	5305-00-940-8069	96906	MS90727-197
5	9		19207	12296263-1
5	9	5340-01-171-8830	19207	12296263
5	10	4730-00-050-4208	96906	MS15003-1
6	1	5315-00-815-8840	96906	MS35810-4
6	1	5315-00-815-8840	96906	MS35810-4
6	2	5340-00-995-0823	96906	MS35812-4
6	2	5340-00-985-0823	96906	MS35812-4
6	3	5310-00-975-2075	96906	MS35691-21
6	3	5310-00-975-2075	96906	MS35691-21
6	4	5306-01-171-8750	19207	10950594-2
6	4	5306-01-262-7926	19207	10950594-3
6	4	5306-01-305-3869	19207	10950594-1
6	5	5310-01-109-6746	96906	MS27952-32
6	5	5310-01-109-6746	96906	MS27952-32
6	6	5340-00-693-0739	19207	8331946
6	6	5340-00-693-0739	19207	8331946
6	7	5306-00-225-8496	96906	MS90725-31
6	7	5306-00-226-4825	80204	81821BH031C075N
6	8	5310-00-407-9566	96906	MS35338-45
6	8	5310-00-407-9566	96906	MS35338-45
6	9	5340-00-408-9177	19207	5303461
6	9	5340-00-408-9177	19207	5303461
6	10	2530-00-863-5596	96906	MS53060-6
6	10	2530-00-863-5596	96906	MS53060-6
6	11	5310-00-880-7744	96906	MS51967-5
6	11	5310-00-880-7744	96906	MS51967-5
6	12	5360-01-085-5570	19207	11597761
6	13	2540-01-166-0201	19207	10950652-1
6	13	2540-01-166-0202	19207	10950652-2
6	14	5310-00-761-6882	96906	MS51967-2
6	15	5310-00-582-5965	99539	CBM21389
6	16	5305-00-068-0502	96906	MS90725-6

CROSS-REFERENCE INDEXES

FIGURE AND ITEM NUMBER INDEX

FIG.	ITEM	STOCK NUMBER	CAGEC	PART NUMBER
6	17		19207	10950594-4
6	18	3040-01-306-6476	19207	12370093
6	19	3040-01-305-5898	19207	12370092
6	20	5305-00-269-3217	96906	MS90725-67
6	21	5365-00-899-6723	19207	8699500
6	22	5310-00-637-9541	96906	MS35338-46
6	23	5310-00-732-0558	96906	MS51967-8
6	24	3040-00-330-3262	19207	7392815
6	25	5315-00-842-3044	96906	MS24665-283
6	25	5315-00-842-3044	96906	MS524665-283
6	26	5310-01-306-1624	96906	MS27183-58
7	1	5305-00-269-3240	80204	B1821BH038F150N
7	2	5310-00-627-6128	96906	MS35335-35
7	3	5310-00-732-0559	96906	MS551968-8
7	4	5305-00-269-3241	80204	B1821BH038F175N
7	5		19207	8336701
7	5		19207	8336702
7	6	5310-00-924-4218	96906	MS51970-1
7	7	5310-00-582-5965	96906	MS35338-44
7	8	5310-00-641-9939	19207	5323088
7	9	5365-00-741-2103	19207	7412103
7	10	5305-00-269-3240	96906	MS90727-64
7	11	5306-00-741-1760	19207	7411760
7	12	5340-00-987-2565	19207	8733891
7	12	5340-00-991-4342	19207	8733890
7	13	5310-00-761-6882	96906	MS51967-2
7	14	5340-00-776-3264	19207	8735729
7	15	5315-00-741-2106	19207	7412106
7	16	2530-00-522-1157	19207	8733892
7	16	2530-00-794-9763	21450	8733893
7	17	5305-00-068-0515	80204	B1821BH025F10lN
7	18	5360-00-699-9018	19207	8720515
8	1	2530-00-791-0110	19207	8733902
8	1	2530-00-791-3259	78500	A1-3236M1261
8	2	2530-00-798-4812	19207	8733897
8	3	2530-00-159-8756	19207	8733909
8	4	2530-00-770-9151	19207	8336789
8	5	2530-00-770-9149	19207	8336704
8	6	5310-00-853-9335	96906	MS35691-13
8	7	5310-00-167-0721	96906	MS35333-41
8	8	3020-00-741-2104	19207	7412104
8	9	5310-00-741-2120	19207	7412120
8	10		19207	8733932
8	10	2530-01-083-5641	19207	8733933
8	11	5306-00-994-8975	19207	8720331
8	12	5305-00-269-3233	96906	MS90727-57
8	13	5310-00-627-6128	96906	MS35335-35
8	14	2530-00-798-4824	19207	8733896
8	15	2530-00-770-9149	19207	8336704
8	16	5305-00-770-9150	19207	8336705
8	17	2530-00-159-8755	19207	8733908

CROSS-REFERENCE INDEXES

FIGURE AND ITEM NUMBER INDEX

FIG.	ITEM	STOCK NUMBER	CAGEC	PART NUMBER
9	1	2530-00-693-1007	78500	A8-3222W855
9	2		19207	8720517
9	3		96906	MS16536-175
9	4		19207	7064979
9	5	5310-00-903-3993	96906	MS51970-4
9	6	5310-00-550-3503	96906	MS35335-36
9	7	3040-00-074-2357	19207	8733927
9	7	3040-00-150-7127	19207	8733926
9	8	5315-00-322-7261	19207	8733938
9	9	2530-00-973-2355	02686	123917
9	9	2530-00-973-2356	19207	8733912
9	10	5310-00-314-0765	19207	8733936
9	11	5310-00-314-6764	19207	8733935
9	12	5310-00-322-7260	19207	8733937
10	1	2530-00-741-2065	19207	7412065
10	2	2530-00-741-2050	19207	7412050
10	2	2530-00-741-2068	19207	7412068
10	3	2530-00-737-3260	19207	7373260
10	4	5310-00-407-9566	96906	MS35338-45
10	5	5306-00-225-8496	96906	MS90725-31
10	6		19207	8733898
10	6		19207	8733899
10	7	5310-00-741-2088	19207	7412088
10	8	4730-00-419-9425	19207	7745464
10	9	5365-00-274-4544	19207	5298653
10	10	4730-00-729-6437	19207	7412079
10	11	4710-00-566-7134	19207	8733922
10	11	4710-00-741-1907	19207	7411907
10	12	4730-00-741-1903	19207	7411903
10	13	4710-00-566-7133	19207	8733920
10	13	4710-00-630-9928	19207	8733918
11	1	4730-00-463-1588	19207	5167679
11	2	4730-01-196-7856	19207	11669743
11	3	4710-01-242-4899	19207	12314066
11	4	5310-00-835-2037	96906	MS35691-53
11	5	4720-00-580-7470	19207	8380781
11	6	5310-00-880-8189	96906	MS51967-11
11	7	5310-00-209-0965	96906	MS35338-47
11	8	5305-00-071-1788	80204	B18218H044C125N
11	9	4710-01-242-1001	19207	12314067
11	10	5305-00-990-6444	96906	MS535207-261
11	11	5310-00-045-3296	96906	MS35338-43
11	12	5340-00-057-2890	96906	MS21333-3
11	13	4730-01-243-3489	19200	143450
11	14		19207	12314069
11	15		19207	12270005
11	16	4720-00-203-9658	23705	A298819
11	17	4730-00-289-4937	79470	112-06007
11	18	5330-00-930-5292	19207	5156636
11	19	4710-01-243-3664	19207	12313050
11	20	4730-00-359-0230	63477	FC-11409

CROSS-REFERENCE INDEXES

FIGURE AND ITEM NUMBER INDEX

FIG.	ITEM	STOCK NUMBER	CAGEC	PART NUMBER
11	21	5310-00-741-2088	63477	FC-13030
11	22	4730-00-419-9425	19207	7745464
11	23	5365-00-274-4544	19207	5298653
11	24	5305-00-988-1721	96906	M5S35206-277
11	25	5310-00-582-5965	96906	MS35338-44
11	26	5340-00-282-7519	96906	MHS21333-34
11	27		19207	12313049
11	28	4720-01-050-3401	19207	8363981-1
11	29	4730-01-195-3577	19207	11669744
11	30	4820-01-196-4078	91816	4628-2PPP
11	31	5305-00-995-3440	96906	MS35207-270
11	32	5310-00-045-3296	96906	MS35338-43
11	33		19207	12314070
11	34	4710-01-242-1002	19207	12270014
11	35		19207	12314068
12	1	4710-01-242-1002	19207	12270014
12	2	5310-00-880-8189	96906	MS51967-11
12	3	5310-00-209-0965	96906	MS35338-47
12	4	4730-00-463-1588	19207	5167679
12	5		19207	12270005
12	6	4720-01-259-8822	19207	8363981-2
12	7	4730-00-729-6437	19207	7412079
12	8	5310-00-741-2088	19207	7412088
12	9	4730-00-419-9425	19207	7745464
12	10	5365-00-274-4544	19207	5298653
12	11	5340-00-282-7519	96906	M5S21333-34
12	12	5310-00-582-5965	96906	M535338-44
12	13	4720-01-259-8823	19207	8363981-3
12	14	4730-00-289-4937	19207	8365390
12	15	5330-00-930-5292	19207	5156636
13	1	4710-01-242-1002	19207	12270014
13	2		19207	12270005
13	3	4720-00-203-9658	19207	7411023
13	4	4820-01-196-4078	91816	462B-2PPP
13	5	4730-01-195-3577	19207	11669744
13	6	4710-01-243-3664	19207	12313050
13	7	4730-00-729-6437	19207	7412079
13	8	5310-00-741-2088	19207	7412088
13	9	4730-00-419-9425	19207	7745464
13	10	5365-00-274-4544	19207	5298653
13	11	5340-00-282-7519	96906	MS21333-34
13	12	5310-00-582-5965	96906	MS35338-44
13	13	5310-00-761-6882	96906	MS51967-2
13	14	4730-00-463-1588	19207	5167679
13	15	5305-00-071-1788	80204	B18218H044C125N
13	16	5310-00-209-0965	96906	MS35338-47
13	17	5310-00-880-8189	96906	MS51967-11
13	18		19207	12313049
13	19	4720-01-050-3401	19207	8363981-1
13	20	4710-01-309-6211	19207	12370320
13	21	4730-00-289-4937	19207	8365390

CROSS-REFERENCE INDEXES

FIGURE AND ITEM NUMBER INDEX

FIG.	ITEM	STOCK NUMBER	CAGEC	PART NUMBER
13	22	5330-00-930-5292	19207	5156636
13	23		81343	4 130109C8
13	24	4730-01-196-7856	19207	11669743
13	25	5305-00-995-3440	96906	MS35207-270
13	26	5310-00-045-3296	96906	MS35338-43
14	1	5305-00-993-1848	96906	MS35207-265
14	2	5310-00-045-3296	96906	MS35338-43
14	3		19207	12314058
14	4		19207	12314057
14	5		57771	04286
14	6	5340-01-198-8768	57771	D3103
14	7	5310-00-866-4418	19200	10910174-7
14	B	5305-00-726-2543	96906	MS90727-160
14	9	2530-01-257-7702	19207	12314065
14	10	4030-00-262-1894	88044	AN100C8
14	11	3040-01-257-7709	19207	12331693
14	12	5306-01-245-7186	96906	MS90727-31L
14	13	5360-01-245-3939	19207	12331699
14	14	4730-01-210-0338	96906	MS51879-3
14	15	5315-01-245-0854	19207	12331702
14	16	5315-00-810-3702	96906	MS16562-38
14	17	5310-00-809-4085	96906	MS27183-16
14	18	4710-01-243-3665	19207	12331701
14	19	4730-00-289-1930	81343	3-2 0401028A
14	20	5305-00-993-1843	96906	MS35207-265
14	21	4730-01-098-1669	96906	MS39232-6
14	22	5310-00-045-3296	96906	M535338-43
14	23	5340-01-231-5359	96906	MS21919WCG-28
14	24	4610-01-208-5831	62144	18A-849210-000
14	25		19207	12314081
14	26		19207	12314081-1
14	27	4030-01-114-3895	96906	M551844-26
14	28		19207	12331704
14	29	4030-01-109-1432	96906	MS51844-24
14	30		19207	12331704-1
14	31	3040-01-257-7679	19207	12331696
14	32	2530-01-242-7977	19207	11669750
15	1	1095-01-195-3572	93072	622812
15	2	2530-00-400-2229	93072	580546
15	3	9390-00-088-0581	93072	621001
15	4	5340-00-102-5042	93072	622020
15	5	4730-01-260-6916	93072	52133-9
15	6	1095-01-195-3573	93072	622813
15	7	2530-00-911-5378	16128	580376
15	8	1095-01-195-6481	19207	12314063
15	9	5330-00-105-4474	93072	580342
15	10	5310-00-097-6908	93072	57504
15	11	2530-01-243-7156	19207	12354237
15	12	5360-01-245-3934	19207	12354238
16	1	2530-00-204-4800	63477	FE14240
16	2	5340-00-689-6160	19207	7979699

CROSS-REFERENCE INDEXES

FIGURE AND ITEM NUMBER INDEX

FIG.	ITEM	STOCK NUMBER	CAGEC	PART NUMBER
16	3	2590-01-191-5917	19207	12331725-1
17	1	4720-00-318-1016	06721	N13448
17	2	4730-00-595-0083	79146	MS35746-1
17	3	5330-00-090-2128	96906	MS35748-1
17	4	9905-00-999-7370	96906	MS53007-1
17	5	4730-00-069-1186	81343	6-4 1201028A
17	6	5305-00-952-0760	96906	MS35207-277
17	7	5310-00-582-5965	99539	C8M21389
17	8	5340-00-809-1492	81348	CMDX2-3PT573036
17	9	4730-00-069-1187	81343	6-4 100202BA
17	10	5325-00-270-8889	96906	MS35489-81
17	11		19207	CPR104420X36
17	12	4730-01-079-8821	19207	CPR102321-1
17	13		19207	CPR104420X24
17	14		19207	CPR104420X102
17	15		19207	10950611
17	16	9905-00-999-7369	96906	MS53007-2
17	17	4730-00-278-6318	19207	8328782
18	1	4730-00-069-1186	81343	6-4 1201028A
18	2	9905-00-999-7369	96906	MS53007-2
18	3	4720-00-318-1016	06721	N13448
18	4	4730-00-595-0083	79146	MS35746-1
18	5	5330-00-090-2128	96906	MS35748-1
18	6	4730-00-278-6318	19207	8328782
18	7	9905-00-999-7370	96906	MS53007-1
18	8		19207	10950611
18	9	5340-00-809-1492	81348	CMDX2-3PT573036
18	10	5310-00-582-5965	96906	MS535338-44
18	11	5310-00-761-6882	96906	MS51967-2
18	12		19207	CPR104420-2/48
18	13	4730-01-079-8821	19207	CPR102321-1
18	14	4730-00-069-1187	81343	6-4 100202BA
18	15		19207	CPR104420-2/36
18	16		19207	CPR104420-2/84
19	1	5306-00-797-9296	19207	7979296
19	2	5310-00-582-5965	99539	CBM21389
19	3	5310-00-761-6882	96906	MS51967-2
19	4	2530-00-797-9295	23705	A298749
19	5		19207	7415748
19	6		19207	7411081
19	7		19207	7979614
19	8		19207	7979612
19-	9		19207	8329823
19	10	4730-00-580-8457	19207	7979613
19	11	4730-00-221-2136	96906	MS20913-1S
20	1	2530-00-152-2197	19207	11636427
20	2	5310-00-732-0559	96906	M551968-8
20	3	5310-00-637-9541	96906	MS35338-46
20	4	5307-00-011-3247	12204	113247
20	5	4730-00-057-5555	81343	6 130109NC
20	6	5305-00-543-2419	80204	818218H038C113N

CROSS-REFERENCE INDEXES

FIGURE AND ITEM NUMBER INDEX

FIG.	ITEM	STOCK NUMBER	CAGEC	PART NUMBER
20	7	5310-00-080-6004	96906	MS27183-14
20	8	4030-00-273-3079	96906	MS20664C4
20	9	5120-01-095-7820	19207	12250283
20	10		81349	MIL-W-5424BX102
20	10		81349	MIL-W-5424BX70
20	10		81349	MIL-W-54248X90
20	11	4710-01-242-4900	19207	12296282
20	11	4710-01-273-5903	19207	12296282-3
20	12	5360-01-201-6925	96906	MS24585-1385
20	13	5305-00-812-3303	80205	NAS1081-3A4
20	14	5340-01-092-0443	19207	12250284
20	15	4030-00-838-3533	96906	MS16843-1
20	16	5310-00-732-0558	96906	MS51967-8
20	17	5310-00-637-9541	96906	MS35338-46
20	18	4820-00-116-2994	98343	121565
20	19	2530-00-021-2366	96906	MS53004-2
21	1	2530-00-293-5139	23075	A298320
21	2	2530-00-737-7783	40342	N-2340
21	3	5340-01-141-4814	19207	7979602
21	4	5306-00-225-9088	96906	MS90726-33
21	5	1095-01-162-0352	19207	7979599
21	6	5340-00-178-1441	19207	7979610
21	7	5360-00-700-4429	19207	7979608
21	8	5330-01-046-3300	81349	M83461/1-012
21	9	5310-00-637-9541	96906	MS35338-46
21	10	5310-00-732-0558	96906	MS51967-8
21	11	5310-00-880-7746	96906	MS51968-5
21	12	5310-00-407-9566	96906	MS35338-45
21	13	2530-00-192-8928	19207	7979605
21	14	2530-00-026-0200	19207	8365427
22	1	2530-00-178-0720	19207	11592642
22	1	2530-01-305-9979	19207	12370096
22	2	5305-00-988-1725	96906	MS35206-281
22	2	5305-00-988-1725	96906	MS35206-281
22	3	5310-00-582-5965	96906	MS35338-44
22	3	5310-00-582-5965	96906	MS35338-44
22	4	2530-00-614-4454	19200	6144454
22	4	2530-00-614-4454	19200	6144454
22	5	5330-00-246-8223	19207	10910885
22	5	5330-00-246-8223	19207	10910885
22	6	5310-00-741-1379	19207	7411379
22	7	5310-00-741-1378	19207	7411378
22	8	3110-00-100-5951	96906	MS19081-112
22	9	5310-00-518-5566	96906	MS51983-1
22	9	5310-00-594-8038	96906	MS51983-2
22	10	5306-00-383-4957	96906	MS51946-2
22	10	5306-00-733-9239	96906	MS51946-1
22	11	1095-01-171-0203	19207	11682127-2
22	11	1095-01-172-9560	19207	11682127-1
22	12	5310-00-982-4908	96906	MS21045-6
22	13	5310-00-080-6004	96906	MS527183-14

CROSS-REFERENCE INDEXES

FIGURE AND ITEM NUMBER INDEX

FIG.	ITEM	STOCK NUMBER	CAGEC	PART NUMBER
22	14	5306-00-335-4768	19207	8720025
22	15	5330-00-741-1429	19207	7411429
22	16	5365-00-741-1433	19207	7411433
22	17	5306-00-206-1560	96906	MS51946-11
22	18	2530-00-741-3231	19207	7413231
22	19	2530-00-741-1425	19207	7411425
22	20	5310-00-998-0608	96906	MS35692-61
23	1	2640-00-555-2829	79934	TR-501
23	2	2640-00-255-9346	81348	ZZ-V-25/TIV/CL1/ TR-VC-3
23	3	2640-01-111-5467	27783	5888
23	4	2610-01-204-4488	81348	ZZ-T-381/GP3A/12 -165/F/TBHR
23	4	2610-01-256-0080	81348	GP3STYLXTYRACLT/ 0/11.00-17.5/H/T
24	1	2510-01-162-0365	19207	12269910
24	2	5310-00-637-9541	96906	MS35338-46
24	3	5305-00-984-5690	96906	MS35206-310
24	4	4010-01-171-6044	19207	12270017-3
24	5	5315-01-061-4972	19207	11636686-1
24	6	5315-01-093-5341	19207	12250215-1
24	7	4030-01-169-6996	19207	12296277
24	8	4030-00-916-2141	96906	M5S87006-53
25	1	4010-01-169-6995	19207	11636654-4
25	2	5310-00-832-9719	96906	MS51922-61
25	3	4030-00-075-7212	19207	10891283
25	3	4030-00-149-5574	18876	8485436
25	4	5305-00-728-5474	80204	81821BH075F350N
25	5	5315-01-061-4972	19207	11636686-1
25	6	4030-00-916-2141	96906	MS87006-53
25	7	4010-01-169-6994	19207	12270017-1
25	8	2540-01-195-3578	19207	12314074
25	8	2540-01-311-0209	19207	12370346
25	9	5305-00-947-4360	80204	81821BH075C450N
25	10	5365-01-169-7023	19207	12269915
25	11	5310-00-409-3333	96906	M551943-45
25	12		19207	12259670
25	13	5310-00-637-9541	96906	MS35338-46
25	14	5305-00-269-3241	80204	B1821BH038F175N
25	15	4010-01-172-7685	19207	12270017-2
25	16	5315-01-165-4884	19207	12259673
25	17	2540-01-370-5892	19207	11682150
26	1	5315-00-849-9854	96906	MS24665-498
26	2	5310-00-983-8485	96906	MS27183-30
26	3	3040-00-178-0718	19207	11592656
26	4	5305-00-724-6738	96906	MS51965-54
26	5	4010-00-182-8797	19207	11636668
26	6	5306-00-152-0562	19207	11636665
26	7		19207	11592657
26	7	3040-01-305-3314	19207	12370119
26	8	4730-01-305-3220	19207	12370118

CROSS-REFERENCE INDEXES

FIGURE AND ITEM NUMBER INDEX

FIG.	ITEM	STOCK NUMBER	CAGEC	PART NUMBER
26	9	5305-00-071-2513	80204	B18218HH025C250N
26	10	3040-00-152-2205	19207	11636591
26	11	5306-00-182-9369	19207	11636670
26	12	5310-00-823-8803	96906	MS27183-21
26	13	5360-00-740-9903	19207	7409903
26	14	5306-01-160-4479	19207	11636459
26	15	5310-00-809-4085	96906	MS27183-16
26	16	5360-01-149-1679	19207	8364009
26	17	5340-01-082-9321	19207	8364004
26	18		19207	12259676
26	18	5340-00-860-0533	19207	10885456
26	19	5340-00-152-2200	19207	11592666
26	20	4030-00-233-9568	96906	MS16842-3
26	21	5310-00-761-6882	96906	MS51967-2
26	22	5310-00-761-6882	96906	MS51967-2
26	23	5310-00-582-5965	96906	MS35338-44
27	1	5120-01-322-6502	19207	12355851
27	2	2590-00-582-5503	19207	8005089
27	3	5310-00-341-2387	18876	8020015
27	4	5310-00-225-6408	96906	MS51922-53
27	5		19207	12259676-1
27	5	5340-01-171-0056	19207	12259676
27	6	5305-00-922-7994	80204	81821BH075C250N
27	7		19207	11603277
27	8	5310-00-067-6356	96906	MS51922-57
27	9	5306-01-160-4479	19207	11636459
27	10	5310-00-809-4085	96906	MS27183-16
27	11	5360-01-149-1679	19207	8364009
27	12	5340-01-082-9321	19207	8364004
28	1	5340-00-075-9147	19207	10914500
28	2		19207	12370451
28	2	5340-01-162-0361	19207	12269919
28	2	5340-01-220-0125	19207	12269919-1
28	3	5310-00-584-5272	96906	MS35338-48
28	4	5310-00-732-0560	96906	MS51968-14
28	5	5310-00-763-8905	96906	MS51968-20
28	6	5310-00-835-2037	96906	MS35691-53
28	7	5310-00-763-8912	96906	MS551968-26
28	8	5310-00-971-7990	96906	MS35691-69
28	9	5365-01-165-4977	19207	12259777
28	10	5310-00-087-4652	96906	MS551922-17
28	11	5340-01-305-6333	19207	12355891
28	12	5310-00-080-6004	96906	MS27183-14
28	12	5310-00-809-4061	96906	MS27183-15
28	13	5305-00-543-2866	80204	B1821BH038C250N
28	13	5305-00-821-3869	80204	B18121BH03C175N
28	14	2510-01-273-4464	19207	12354278
28	14	5340-01-172-7862	19207	12269939
28	14	5360-01-291-2977	19207	12357900
28	15		19207	12259766-2
28	15	5330-01-262-7911	19207	12259766-1

CROSS-REFERENCE INDEXES

FIGURE AND ITEM NUMBER INDEX

FIG.	ITEM	STOCK NUMBER	CAGEC	PART NUMBER
28	15	5365-01-167-4609	19207	12259766
28	16	5340-01-162-0362	19207	12259793
28	17		19207	12259794
28	18	3120-01-230-0032	19207	12259792
28	19		19207	12259791-2
28	19	5305-01-172-7739	19207	12259791
28	19	5305-01-263-3814	19207	12259791-1
28	20		19207	12259783-2
28	20	5306-01-169-6987	19207	12259783
28	20	5306-01-264-6371	19207	12259783-1
28	21	5365-01-171-8950	19207	12259775
28	22	3120-01-169-6990	19207	12269920
28	23	5365-01-169-7022	19207	12259774
28	24	5310-01-174-0553	19207	12259779
29	1	5305-00-984-5693	96906	MS35206-313
29	2	5310-00-637-9541	96906	MS35338-46
29	3		19207	12269756
29	3		19207	12331761
30	1	9905-00-202-3639	96906	M535387-2
30	2	5310-00-550-1130	96906	MS35333-40
30	3	5305-00-952-0760	96906	MS35207-277
30	4	9905-00-205-2795	96906	MS35387-1
30	5	5306-01-131-2887	80205	NAS1251A25-28
30	6	5310-00-584-7888	96906	MS35338-51
30	7	5310-00-763-8901	96906	MS51968-23
30	8	5310-00-880-7746	96906	MS51968-5
30	9	5310-00-407-9566	96906	MS35338-45
30	10	5977-01-220-0128	19207	12354229
30	11	5306-00-225-9088	96906	MS90726-33
30	12	2540-00-678-3469	96906	MS52127-3
30	13	5310-00-087-7493	96906	MS27183-13
30	14	5310-00-880-7744	96906	MS51967-5
30	15		81348	RR-C-271X102
30	16	5340-01-243-9656	81349	M43770/6-M1ZE1
30	17	5306-00-108-0943	96906	MS35751-65
30	18	5306-00-050-1238	96906	MS90727-32
30	19	5315-00-012-0123	96906	MS24665-355
30	20	5310-00-823-8803	96906	MS27183-21
30	21	4030-01-312-5982	19207	12357596
30	22	5315-01-305-6274	19207	12357598
30	23	5306-00-068-0514	80204	B18218H025F088N
30	24	4030-01-162-0366	19207	12314105
30	25	5310-00-582-5965	96906	M535338-44
30	26	5310-00-913-7020	96906	MS51968-3
31	1		19207	12345617
31	1	9905-01-168-0522	19207	12269912
31	1	9905-01-220-0143	19207	12331752
31	1	9905-01-291-2971	19207	12370339
31	2	5305-00-253-5631	96906	MS21318-57
31	3		19207	12354280
31	4	5305-00-850-5841	96906	MS21318-37

CROSS-REFERENCE INDEXES

FIGURE AND ITEM NUMBER INDEX

FIG.	ITEM	STOCK NUMBER	CAGEC	PART NUMBER
32	1	5330-01-174-1563	19207	12269604
32	2	5310-00-637-9541	96906	MS35338-46
32	3	5305-00-269-2803	96906	M590726-60
32	4	5310-01-170-2107	19207	12296281
32	5	5310-00-209-1510	96906	MS35333-45
32	6	5310-00-582-5965	96906	MS35338-44
32	7	5305-00-993-2461	96906	MS35207-281
32	B	5340-01-166-0204	19207	12269757
32	9	5330-01-176-2016	19207	12269857
32	10	5340-01-167-3584	19207	12269901
32	11	5310-00-582-5965	96906	MS35338-44
32	12	5305-00-988-1725	96906	M535206-281
32	13	5305-00-267-8952	96906	MS90727-3
32	14	5310-00-582-5965	96906	MS35338-44
32	15	5365-01-175-4311	19207	12269987
32	16		72166	A-401-8160
32	17	5975-00-296-9437	59730	2534
32	18	1095-01-162-0359	19207	12270024

☆U.S. GOVERNMENT PRINTING OFFICE: 1994-546-017/010089

APPENDIX G
ILLUSTRATED LIST OF MANUFACTURED ITEMS

Section I. INTRODUCTION

G-1. SCOPE.

a. This appendix includes complete instructions for making items authorized to be manufactured or fabricated.

b. A part number index in alphanumeric order is provided for cross-referencing the part number of the item to be manufactured to the figure which covers fabrication criteria.

c. All bulk materiels needed for manufacture of an item are listed by National Stock Number (NSN), part number, or specification number in the manufacturing instructions. All dimensions given are in standard units.

Table G-1. Manufactured Items Part Number Cross-reference Index.

Part Number	Figure Title	Figure Number
CPR104420X24	Air Line Hoses	G-3
CPR104420X36	Air Line Hoses	G-3
CPR104420X102	Air Line Hoses	G-3
CPR104420-2X36	Air Line Hoses	G-3
CPR104420-2X48	Air Line Hoses	G-3
CPR104420-2X84	Air Line Hoses	G-3
MIL-W-5424BX70	Air Reservoir Wire Ropes	G-4
MIL-W-5424BX90	Air Reservoir Wire Ropes	G-4
MIL-W-5424BX102	Air Reservoir Wire Ropes	G-4
RR-C-271X102	Wheel Chock Chain	G-5
10905840-AR	Tie-down Support Strap	G-1
12314081-1	Inertia Brake Actuator Wire Ropes	G-2
12331704-1	Inertia Brake Actuator Wire Ropes	G-2

Section II. MANUFACTURING INSTRUCTIONS

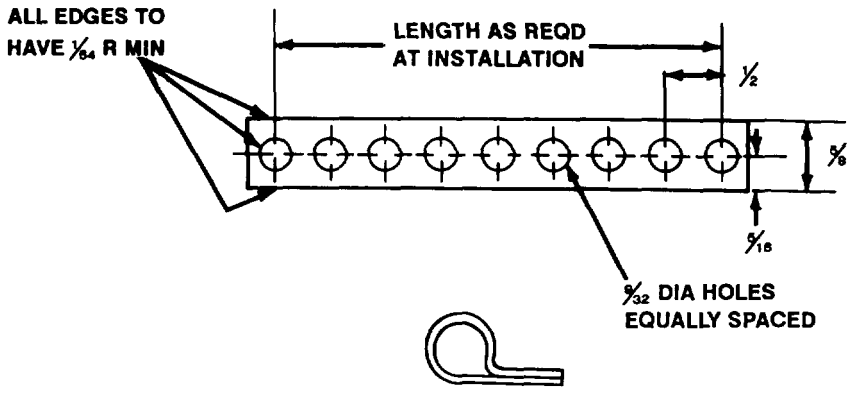

1. Fabricate from part number 10905840, strap, tie-down, electrical.
2. Cut length as required for installation to make part number 10905840-AR.
3. Round edges may be obtained by fusion.

Figure G-1. Tie-down Support Strap.

---

1. Fabricate from NSN 4010-00-171-4236, part number 7068272, rope, wire.
2. Cut length of 70.00 in. Form a loop of 4.00 in. at one end and install sleeve, part number MS51844-26. Crimp sleeve. Apply part number 12314081-1 to finished length of 64.00 in.
3. Cut length of 14.00 in. Form a loop of 3.88 in. at one end and install sleeve, part number MS51844-24. Crimp sleeve. Apply part number 12331704-1 to finished length of 18.38 in.

Part Number	Finished Length
12314081-1	64.00 in.
12331704-1	18.38 in.

Figure G-2. Inertia Brake Actuator Wire Ropes.

TA701019

Section II. MANUFACTURING INSTRUCTIONS (Con't)

1. Fabricate from NSN 4720-01-014-4915, part number 246115, hose, nonmetallic.
2. Cut hose to required length. Ends must be cut square.

Part Number	Finished Length
CPR 104420X24	24.00 in.
CPR 104420X36	36.00 in.
CPR 104420X102	102.00 in.
CPR 104420-2X36	36.00 in.
CPR 104420-2X48	48.00 in.
CPR 104420-2X84	84.00 in.

Figure G-3. Air Line Hoses.

---

1. Fabricate from NSN 4010-01-169-2157, part number 921E316 ITEM 9, rope, wire.
2. Cut to required length.

Part Number	Finished Length
MIL-W-5424BX70	70.00 in.
MIL-W-5424BX90	90.00 in.
MIL-W-5424BX102	102.00 in.

Figure G-3. Air Line Hoses.

---

1. Fabricate from NSN 4010-00-009-5816, part number NAS1455-2-14C, chain, weldless.
2. Use old chain as guide. Cut new chain to required length to make part number RR-C-271X1 02.

Figure G-5. Wheel Chock Chain.

APPENDIX H
TORQUE LIMITS

H-1. SCOPE.

This appendix lists standard torque values, as shown in Table H-1, and provides general information for applying torque. Special torque values and tightening sequences are indicated in the maintenance procedures for applicable components.

H-2. GENERAL.

a. Always use the torque values listed in Table H-1 when the maintenance procedure does not give a specific torque value.

b. Unless otherwise indicated, standard torque tolerance shall be ±10%.

c. Torque values listed are based on clean, dry threads. Reduce torque by 10% when engine oil is used as a lubricant. Reduce torque by 20% if new plated capscrews are used.

d. Capscrews threaded into aluminum may require reductions in torque of 30% or more of Grade 5 capscrews torque. Capscrew threaded into aluminum must also attain two capscrew diameters of thread engagement.

CAUTION

If replacement capscrews are of higher grade than originally supplied, use torque specifications for the original. This will prevent equipment damage due to overtorquing.

Table H-1. Torque Limits.

Current Usage	Much Used	Much Used	Used at Times	Used at Times
Quality of Material	Indeterminate	Minimum Commercial	Medium Commercial	Best Commercial
SAE Grade Number	1 or 2	5	6 or 7	8
Capscrew Head Markings Manufacturer's marks may vary These are all SAE Grade 5 (3 line)	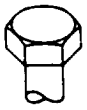			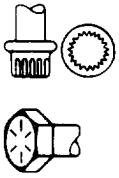
Capscrew Body Size Inches - Thread	Torque lb.-ft. (N•m)	Torque lb.-ft. (N•m)	Torque lb.-ft. (N•m)	Torque lb.-ft. (N•m)
¼ 20	5 (7)	8 (11)	10 (14)	12 (16)
28	6 (8)	10 (14)		14 (19)
5/16 18	11 (15)	17 (23)	19 (26)	24 (33)
24	13 (18)	19 (26)		27 (37)
⅜ 16	18 (24)	31 (42)	34 (46)	44 (60)
24	20 (27)	35 (47)		49 (66)
7/16 14	28 (38)	49 (66)	55 (75)	70 (95)
20	30 (41)	55 (75)		78 (106)
½ 13	39 (53)	75 (102)	85 (115)	105 (142)
20	41 (56)	85 (115)		120 (163)
9/16 12	51 (69)	110 (149)	120 (163)	155 (210)
18	55 (75)	120 (163)		170 (231)
⅝ 11	83 (113)	150 (203)	167 (226)	210 (285)
18	95 (129)	170 (231)		240 (325)
¾ 10	105 (142)	270 (366)	280 (380)	375 (508)
16	115 (156)	295 (400)		420 (569)
⅞ 9	160 (217)	395 (536)	440 (597)	605 (820)
14	175 (237)	435 (590)		675 (915)
1 8	235 (319)	590 (800)	660 (895)	910 (1234)
14	250 (339)	660 (895)		990 (1342)

TA701020

INDEX

Subject	Paragraph	Page
A		
Actuator, Inertia Brake:		
XM1061	4-34	4-56
XM979	4-34	4-56
Adjustment:		
Handbrake	4-28	4-29
Handbrake Lever	3-10	3-14
Service Brake	4-30	4-48
Air:		
Coupling:		
Cleaning	3-8	3-13
Replacement	4-38	4-68
Filter		
Maintenance	4-37	4-65
Servicing	4-37	4-65
Lines, Hoses, and Fittings	4-39	4-69
Reservoir:		
Cable	4-41	4-74
Replacement	4-41	4-74
Servicing	3-9	3-13
Airbrake Chamber	4-42	4-76
Assembly, General Maintenance Instructions	4-19	4-16
Axle:		
Front	5-2	5-7
Rear	5-2	5-7
Trunnion	5-3	5-9
B		
Bearings, Wheel	4-44	4-81
Bleeding Hydraulic Brake System	4-31	4-49
Blocking, General Maintenance Instructions	4-17	4-16
Bogie Assembly	5-1	5-1

INDEX

Subject	*Paragraph*	*Page*
Brake:		
Inertia:		
Actuator:		
XM1061	4-34	4-56
XM979	4-34	4-56
Hydraulic Hoses:		
XM1061	4-36	4-62
XM979	4-36	4-62
Hydraulic Tubes:		
XM1061	4-36	4-62
XM979	4-36	4-62
Master Cylinder:		
XM1061	4-34	4-56
XM979	4-34	4-56
Service		
Adjustment	4-30	4-48
Maintenance	4-29	4-37
Technical Principles of Operation	1-11	1-12
Brakedrum,	4-44	4-81
Brakeshoe	4-29	4-37
Bumper:		
Pad	4-51	4-96
Spring	4-51	4-96

C

Cable Assembly, Intervehicular:		
Repair	4-24	4-22
Replacement	4-23	4-20
Cable, Air Reservoir	4-41	4-74
Capabilities and Features, Equipment Characteristics	1-6	1-2
Cargo Cover Hook:		
XM1061	4-55	4-102
XM979	4-55	4-102
Carrier, Spare Tire:		
Maintenance	4-49	4-91
Operating	2-14	2-17
Chamber, Airbrake	4-42	4-76

INDEX

Subject	*Paragraph*	*Page*
Chock and Holder, Wheel	4-54	4-100
Cleaning:		
Air Coupling	3-8	3-13
Electrical Connector	3-7	3-12
General Maintenance Instructions	4-16	4-15
Composite:		
Lamp	4-22	4-18
Light	4-22	4-18
Connector Plug	4-24	4-22
Contact	4-24	4-22
Controls and Indicators	2-2	2-1
Coupling:		
Air:		
Cleaning	3-8	3-13
Replacement	4-38	4-68
Trailer to Towing Vehicle	2-10	2-9
Cover	4-52	4-98
Cylinder:		
Master:		
Inertia Brake:		
XM1061	4-34	4-56
XM979	4-34	4-56
Replacement	4-33	4-52
Wheel	4-29	4-37

D

Data:		
Equipment	1-10	1-10
Plates:		
Location and Contents	1-8	1-8
Replacement	4-57	4-104
Destruction of Army Materiel to Prevent Enemy Use	1-3	1-1
Diagram, Wiring	4-27	4-28
Differences Between Models...	1-9	1-9
Disassembly, General Maintenance Instructions	4-19	4-16
Drawbar Ring, Upper	5-7	5-12
Drum, Brake	4-44	4-81
Dusty Areas, Operation In	2-20	2-20

INDEX

Subject	*Paragraph*	*Page*
E		
Electrical Connector, Cleaning	3-7	3-12
Equipment:		
Characteristics, Capabilities, Features	1-6	1-2
Data	1-10	1-10
Extreme Cold, Operation In.	2-17	2-19
Extreme Heat, Operation ln	2-18	2-19
F		
Filter, Air:		
Maintenance	4-37	4-65
Servicing	4-37	4-65
Fittings:		
Air	4-39	4-69
Hydraulic, Service Brake	4-34	4-54
Fording.....	2-22	2-20
Front Axle.	5-2	5-7
G		
General Maintenance Instructions:		
Assembly	4-19	4-16
Blocking	4-17	4-16
Cleaning	4-16	4-15
Disassembly	4-19	4-16
Inspection	4-18	4-16
Removing Burrs, Scratches, and Raised Metal	4-21	4-17
Replacement of Parts	4-20	4-17
H		
Handbrake:		
Adjustment	4-28	4-29
Lever, Adjustment	3-10	3-14
Maintenance	4-28	4-29

INDEX

Subject	*Paragraph*	*Page*
Harness, Wiring:		
Repair	4-26	4-26
Replacement	4-25	4-24
High Humidity, Operation in	2-18	2-19
Holder, Wheel Chock	4-54	4-100
Hook, Cargo Cover:		
XM1061	4-55	4-102
XM979	4-55	4-102
Hoses:		
Air	4-39	4-69
Hydraulic:		
Inertia Brake:		
XM1061	4-36	4-62
XM979	4-36	4-62
Service Brake	4-34	4-54
Hub	4-44	4-81
Hydraulic:		
Brake System, Bleeding	4-31	4-49
Fittings, Service Brake	4-34	4-54
Hoses, Service Brake	4-34	4-54
Tubes, Service Brake	4-34	4-54

I

Indicators and Controls	2-2	2-1
Inertia Brake:		
Actuator:		
XM1061	4-34	4-56
XM979	4-34	4-56
Hydraulic:		
Hoses:		
XM1061	4-36	4-62
XM979	4-36	4-62
Tubes:		
XM1061	4-36	4-62
XM979	4-36	4-62
Master Cylinder:		
XM1061	4-34	4-56
XM979	4-34	4-56

INDEX

Subject	*Paragraph*	*Page*
Inspection:		
General Maintenance Instructions	4-18	4-16
Instructions, Service Upon Receipt	4-5	4-2
Intervehicular Cable Assembly:		
Repair	4-24	4-22
Replacement	4-23	4-20

J

Jack, Leveling:		
Maintenance	4-50	4-94
Operating	2-13	2-16

L

Lamp, Composite	4-22	4-18
Leakage Definitions	2-8	2-4
Leveling Jack:		
Maintenance	4-50	4-94
Operating	2-13	2-16
Lever, Handbrake, Adjustment..	3-10	3-14
Lifting, Preparation for	2-15	2-18
Light, Composite	4-22	4-18
Lines, Air	4-39	4-69
Location and Contents of Data Plates	1-8	1-8
Location and Description of Major Components	1-7	1-3
Lubrication:		
Chart		3-3
Instructions, Specific	3-2	3-1
Lug Terminal	4-24	4-22

M

Major Components, Location and Description	1-7	1-3
Marker Band	4-24	4-22
Master Cylinder	4-33	4-52
Models, Differences Between..	1-9	1-9

INDEX

Subject	*Paragraph*	*Page*
Mounting Plate, Odometer Drive Shaft (XM979)	4-58	4-105
Mud, Operation In	2-19	2-19

O

Odometer Drive Shaft (XM979)	4-58	4-105
Operating:		
Leveling Jacks	2-13	2-16
Spare Tire Carrier	2-14	2-17
Operation In:		
Dusty Areas	2-20	2-20
Extreme Cold	2-17	2-19
Extreme Heat	2-18	2-19
High Humidity	2-18	2-19
Mud	2-19	2-19
Saltwater Areas	2-21	2-20
Sandy Areas	2-20	2-20
Snow	2-19	2-19
Operator/Crew:		
PMCS	Table 2-1	2-5
Troubleshooting	Table 3-1	3-8
Organizational:		
PMCS	Table 4-1	4-5
Troubleshooting	Table 4-2	4-9

P

Pad, Bumper	4-51	4-96
Painting	4-59	4-108
Plate:		
Data:		
Location and Contents	1-8	1-8
Replacement	4-57	4-104
Mounting, Odometer Drive Shaft (XM979)	4-58	4-105
Step:		
M1061A1	4-46	4-85
XM1061	4-46	4-85
XM979	4-46	4-85

INDEX

Subject	*Paragraph*	*Page*
Plug, Connector	4-24	4-22
PMCS:		
Operator/Crew	Table 2-1	2-5
Organizational	Table 4-1	4-5
Preparation for Lifting	2-15	2-18
Preparation of Equipment for:		
Administrative Storage	4-63	4-110
Shipment	4-67	4-113

R

Reach Tube	4-48	4-87
Rear Axle	5-2	5-7
Reflector	4-53	4-99
Relay Valve	4-40	4-72
Replacement of Parts, General Maintenance Instructions	4-20	4-17
Reservoir,Air:		
Replacement	4-41	4-74
Servicing	3-9	3-13
Ring, Swivel (XM1073)	4-56	4-103
Rope Assembly,Wire:		
XM1061	4-47	4-86
XM979	4-47	4-86

S

Saltwater Areas, Operation In	2-21	2-20
Sandy Areas, Operation in.	2-20	2-20
Service Brake:		
Adjustment	4-30	4-48
Hydraulic:		
Fittings	4-34	4-54
Hoses	4-34	4-54
Tubes	4-34	4-54
Maintenance	4-29	4-37
Service Upon Receipt:		
Inspection Instructions	4-5	4-2
Servicing Instructions	4-6	4-2

INDEX

Subject	*Paragraph*	*Page*
Servicing:		
Air:		
Filter	4-37	4-65
Reservoir	3-9	3-13
Instructions, Service Upon Receipt	4-6	4-2
Shackle:		
Tie-down (XM1073)	4-56	4-103
XM1061	4-47	4-86
XM979	4-47	4-86
Shipment, Preparation of Equipment for	4-67	4-113
Shuttle Valve	4-32	4-51
Snow, Operation In	2-19	2-19
Spare Tire Carrier:		
Maintenance	4-49	4-91
Operating	2-14	2-17
Spring:		
Assembly	5-8	5-13
Bumper	4-51	4-96
Stenciling	4-60	4-108
Step Plate:		
M1061A1	4-46	4-85
XM1061	4-46	4-85
XM979	4-46	4-85
Storage, Preparation of Equipment for Administrative	4-63	4-110
Swivel Ring (XM1073)	4-56	4-103
Symptom Index:		
Operator/Crew	3-5	3-8
Organizational	4-14	4-9

T

Technical Principles of Operation, Brake System	1-11	1-12
Termninal Assembly	4-24	4-22
Terminal, Lug	4-24	4-22
Tie-down Shackle (XM1073)	4-56	4-103
Tire:		
Carrier, Spare:		
Maintenance	4-49	4-91
Operating	2-14	2-17

INDEX

Subject	*Paragraph*	*Page*
Tire (Con't):		
Repair	5-6	5-11
Replacement	4-43, 4-45	4-79, 4-84
Towing Instructions	2-11	2-13
Troubleshooting:		
Operator/Crew	Table 3-1	3-8
Organizational	Table 4-2	4-9
Symptom Index:		
Operator/Crew	3-5	3-8
Organizational	4-14	4-9
Trunnion Axle	5-3	5-9
Tube:		
Hydraulic:		
Inertia Brake:		
XM1061	4-36	4-62
XM979	4-36	4-62
Service Brake	4-34	4-54
Reach	4-48	4-87

U

Uncoupling Trailer From Towing Vehicle	2-12	2-14
Upper Drawbar Ring	5-7	5-12

V

Valve:		
Relay	4-40	4-72
Shuttle	4-32	4-51

W

Wheel:		
Bearings	4-44	4-81
Chock and Holder	4-54	4-100
Cylinder	4-29	4-37
Replacement	4-43, 4-45	4-79, 4-84

INDEX

Subject	*Paragraph*	*Page*
Wire Rope Assembly:		
XM1061	4-47	4-86
XM979	4-47	4-86
Wiring:		
Diagram	4-27	4-28
Harness:		
Repair	4-26	4-26
Replacement	4-25	4-24

By Order of the Secretary of the Army:

GORDON R. SULLIVAN
General, United States Amy
Chief of Staff

Official:

MILTON H. HAMILTON
Administrative Assistant to the Secretary of the Army
00840

Distribution:

To be distributed in accordance with DA Form 12-39-E (Block 0004) Operator, Unit, Direct and General Support maintenance requirements for TM9-2330-376-14&P.

*** U.S. GOVERNMENT PRINTING OFFICE: 1992 643-016/60062**

RECOMMENDED CHANGES TO EQUIPMENT TECHNICAL PUBLICATIONS

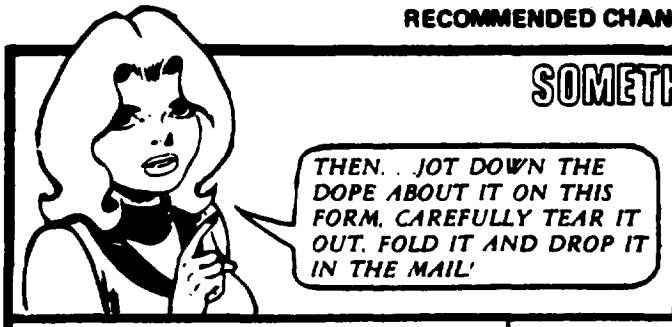

SOMETHING WRONG WITH THIS PUBLICATION?

FROM: (PRINT YOUR UNIT'S COMPLETE ADDRESS)
COB 1st BN 2d BDE
FT. HOOD, TX 76544

DATE SENT 5 May 1993

PUBLICATION NUMBER	PUBLICATION DATE	PUBLICATION TITLE
TM 9-2330-376-14&P		Opr's, Org, DS/GS Maint. Manual Including RPSTL for XM979, XM1061, M1061A1, and XM1073 Trailers

BE EXACT. PIN-POINT WHERE IT IS

PAGE NO	PARA-GRAPH	FIGURE NO	TABLE NO
7-1	—	—	—

IN THIS SPACE TELL WHAT IS WRONG AND WHAT SHOULD BE DONE ABOUT IT:

Item No. 8.
The part number supplied appears to be wrong. When we order it, we receive a retaining ring instead of a slotted washer.

SAMPLE

PRINTED NAME, GRADE OR TITLE, AND TELEPHONE NUMBER
John Doe Sp4 632-0639

SIGN HERE: John Doe

DA FORM 1 JUL 79 2028-2

PREVIOUS EDITIONS ARE OBSOLETE.

P.S.--IF YOUR OUTFIT WANTS TO KNOW ABOUT YOUR RECOMMENDATION MAKE A CARBON COPY OF THIS AND GIVE IT TO YOUR HEADQUARTERS.

REVERSE OF DA FORM 2028-2

TEAR ALONG PERFORATED LINE

FILL IN YOUR UNIT'S ADDRESS

FOLD BACK

DEPARTMENT OF THE ARMY

COB 1st BN 2d BDE

FT. HOOD, TX 76544

Commander
US Army Tank-Automotive Command
ATTN: AMSTA-MB
Warren, Michigan 48397-5000

SAMPLE

RECOMMENDED CHANGES TO EQUIPMENT TECHNICAL PUBLICATIONS

THEN. . JOT DOWN THE DOPE ABOUT IT ON THIS FORM. CAREFULLY TEAR IT OUT. FOLD IT AND DROP IT IN THE MAIL!

SOMETHING WRONG WITH THIS PUBLICATION?

FROM: (PRINT YOUR UNIT'S COMPLETE ADDRESS)

DATE SENT

PUBLICATION NUMBER	PUBLICATION DATE	PUBLICATION TITLE
TM 9-2330-376-14&P	31 Mar 92	Opr's, Org, DS/GS Maint. Manual Including RPSTL for XM979, XM1061, M1061A1, and XM1073 Trailers

BE EXACT PIN-POINT WHERE IT IS

PAGE NO	PARA-GRAPH	FIGURE NO	TABLE NO

IN THIS SPACE TELL WHAT IS WRONG AND WHAT SHOULD BE DONE ABOUT IT:

PRINTED NAME, GRADE OR TITLE, AND TELEPHONE NUMBER

SIGN HERE

DA FORM 1 JUL 79 2028-2

PREVIOUS EDITIONS ARE OBSOLETE.

P.S.--IF YOUR OUTFIT WANTS TO KNOW ABOUT YOUR RECOMMENDATION MAKE A CARBON COPY OF THIS AND GIVE IT TO YOUR HEADQUARTERS.

REVERSE OF DA FORM 2028-2

FILL IN YOUR UNIT'S ADDRESS

FOLD BACK

DEPARTMENT OF THE ARMY

Commander
US Army Tank-Automotive Command
ATTN: AMSTA-MB
Warren, Michigan 48397-5000

TEAR ALONG PERFORATED LINE

RECOMMENDED CHANGES TO EQUIPMENT TECHNICAL PUBLICATIONS

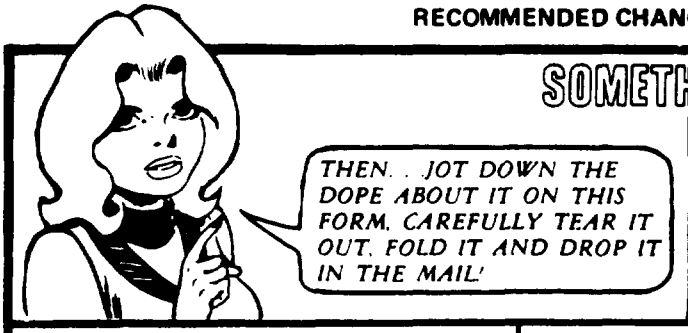

SOMETHING WRONG WITH THIS PUBLICATION?

FROM: (PRINT YOUR UNIT'S COMPLETE ADDRESS)

DATE SENT

PUBLICATION NUMBER	PUBLICATION DATE	PUBLICATION TITLE
TM 9-2330-376-14&P	31 Mar 92	Opr's, Org, DS/GS Maint. Manual Including RPSTL for XM979, XM1061, M1061A1, and XM1073 Trailers

BE EXACT. PIN-POINT WHERE IT IS

PAGE NO	PARA-GRAPH	FIGURE NO	TABLE NO

IN THIS SPACE TELL WHAT IS WRONG AND WHAT SHOULD BE DONE ABOUT IT:

PRINTED NAME, GRADE OR TITLE, AND TELEPHONE NUMBER

SIGN HERE

DA FORM 1 JUL 79 2028-2

PREVIOUS EDITIONS ARE OBSOLETE.

P.S.--IF YOUR OUTFIT WANTS TO KNOW ABOUT YOUR RECOMMENDATION MAKE A CARBON COPY OF THIS AND GIVE IT TO YOUR HEADQUARTERS.

REVERSE OF DA FORM 2028-2

FILL IN YOUR UNIT'S ADDRESS

FOLD BACK

DEPARTMENT OF THE ARMY

Commander
US Army Tank-Automotive Command
ATTN: AMSTA-MB
Warren, Michigan 48397-5000

TEAR ALO

RFORATED LINE

RECOMMENDED CHANGES TO EQUIPMENT TECHNICAL PUBLICATIONS

THEN. . JOT DOWN THE DOPE ABOUT IT ON THIS FORM. CAREFULLY TEAR IT OUT. FOLD IT AND DROP IT IN THE MAIL!

SOMETHING WRONG WITH THIS PUBLICATION?

FROM: (PRINT YOUR UNIT'S COMPLETE ADDRESS)

DATE SENT

PUBLICATION NUMBER	PUBLICATION DATE	PUBLICATION TITLE
TM 9-2330-376-14&P	31 Mar 92	Opr's, Org, DS/GS Maint. Manual Including RPSTL for XM979, XM1061, M1061A1, and XM1073 Trailers

BE EXACT. PIN-POINT WHERE IT IS

PAGE NO	PARA-GRAPH	FIGURE NO	TABLE NO

IN THIS SPACE TELL WHAT IS WRONG AND WHAT SHOULD BE DONE ABOUT IT:

PRINTED NAME, GRADE OR TITLE AND TELEPHONE NUMBER

SIGN HERE

DA FORM 1 JUL 79 2028-2

PREVIOUS EDITIONS ARE OBSOLETE.

P.S.--IF YOUR OUTFIT WANTS TO KNOW ABOUT YOUR RECOMMENDATION MAKE A CARBON COPY OF THIS AND GIVE IT TO YOUR HEADQUARTERS

REVERSE OF DA FORM 2028-2

FILL IN YOUR UNIT'S ADDRESS

FOLD BACK

DEPARTMENT OF THE ARMY

_____

_____

TEAR ALONG PERFORATED LINE

Commander
US Army Tank-Automotive Command
ATTN: AMSTA-MB
Warren, Michigan 48397-5000

THE METRIC SYSTEM AND EQUIVALENTS

LINEAR MEASURE

1 Centimeter=10 Millimeters=0.01 Meters=0.3937 Inches
1 Meter=100 Centimeters=1000 Millimeters=39.37 Inches
1 Kilometer=1000 Meters=0.621 Miles

WEIGHTS

1 Gram=0.001 Kilograms=1000 Milligrams=0.035 Ounces
1 Kilogram=1000 Grams=2.2 Lb
1 Metric Ton=1000 Kilograms=1 Megagram=1.1 Short Tons

LIQUID MEASURE

1 Milliliter=0.001 Liters=0.0338 Fluid Ounces
1 Liter=1000 Milliliters=33.82 Fluid Ounces

SQUARE MEASURE

1 Sq Centimeter=100 Sq Millimeters=0.155 Sq Inches
1 Sq Meter=10,000 Sq Centimeters=10.76 Sq Feet
1 Sq Kilometer=1,000,000 Sq Meters=0.0386 Sq Miles

CUBIC MEASURE

1 Cu Centimeter=1000 Cu Millimeters=0.06 Cu Inches
1 Cu Meter=1,000,000 Cu Centimeters=35.31 Cu Feet

TEMPERATURE

5/9 (°F - 32) = °C
212° Fahrenheit is equivalent to 100° Celsius
90° Fahrenheit is equivalent to 32.2° Celsius
32° Fahrenheit is equivalent to 0° Celsius
9/5 C° +32=F°

APPROXIMATE CONVERSION FACTORS

TO CHANGE	TO	MULTIPLY BY
Inches	Centimeters	2.540
Feet	Meters	0.305
Yards	Meters	0.914
Miles	Kilometers	1.609
Square Inches	Square Centimeters	6.451
Square Feet	Square Meters	0.093
Square Yards	Square Meters	0.836
Square Miles	Square Kilometers	2.590
Acres	Square Hectometers	0.405
Cubic Feet	Cubic Meters	0.028
Cubic Yards	Cubic Meters	0.765
Fluid Ounces	Milliliters	29.573
Pints	Liters	0.473
Quarts	Liters	0.946
Gallons	Liters	3.785
Ounces	Grams	28.349
Pounds	Kilograms	0.454
Short Tons	Metric Tons	0.907
Pound-Feet	Newton-Meters	1.356
Pounds per Square Inch	Kilopascals	6.895
Miles per Gallon	Kilometers per Liter	0.425
Miles per Hour	Kilometers per Hour	1.609

TO CHANGE	TO	MULTIPLY BY
Centimeters	Inches	0.394
Meters	Feet	3.280
Meters	Yards	1.094
Kilometers	Miles	0.621
Square Centimeters	Square Inches	0.155
Square Meters	Square Feet	10.764
Square Meters	Square Yards	1.196
Square Kilometers	Square Miles	0.386
Square Hectometers	Acres	2.471
Cubic Meters	Cubic Feet	35.315
Cubic Meters	Cubic Yards	1.308
Milliliters	Fluid Ounces	0.034
Liters	Pints	2.113
Liters	Quarts	1.057
Liters	Gallons	0.264
Grams	Ounces	0.035
Kilograms	Pounds	2.205
Metric Tons	Short Tons	1.102
Newton-Meters	Pound-Feet	0.738
Kilopascals	Pounds per Square Inch	0.145
Kilometers per Liter	Miles per Gallon	2.354
Kilometers per Hour	Miles per Hour	0.621

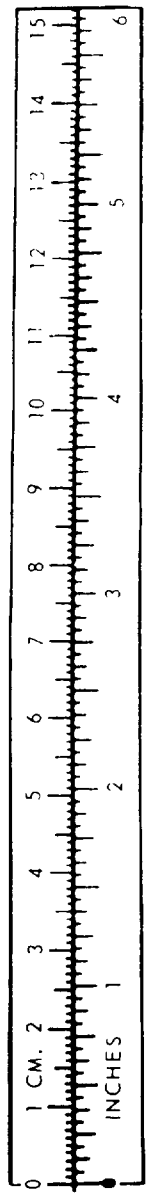

(FOR REFERENCE ONLY)

TAO89991

PIN: 064492-002